ST. ANNE'S COLLEGE OF ENGINEERING AND TECHNOLOGY

Approved by AICTE, New Delhi. Affiliated to Anna University, Chennai
Accredited by NAAC
ANGUCHETTYPALAYAM, PANRUTI – 607 106.

DEPARTMENT OF MECHANICAL ENGINEERING

CME348/MODERN ROBOTICS

REGULATION - R-2021

THIRD YEAR - FIFTH SEMESTER (MECH)

PREPARED BY
K.SARAVANAN. AP/MECHANICAL

CME 348 MODERN ROBOTICS L T P C 2 0 2 3

COURSE OBJECTIVES

1. To introduce definition, history of robotics and robot anatomy.
2. To learn the simulation of robot kinematics
3. To study the grasping and manipulation of robots.
4. To study about mobile robot and manipulation.
5. To study the applications of industrial, service, domestic robots.

UNIT – I INTRODUCTION 6

Robot: Definition, History of Robotics, Robot Anatomy, Co-ordinate systems, types and classification, Configuration space and degrees of freedom of rigid bodies and robots, Configuration space topology and representation; configuration and velocity constraints; task space and workspace, Rigid-body motions, rotation matrices, angular velocities, and exponential coordinates of rotation, Homogeneous transformation matrices.

UNIT- II SIMULATION OF ROBOT KINEMATICS 6

Robot kinematics, Forward and inverse kinematics (two three four degrees of freedom), Forward and inverse kinematics of velocity, Homogeneous transformation matrices, translation and rotation matrices Dennavit and Hartenberg (D-H) transformation, Dynamics of Open Chains, Trajectory Generation, motion planning, robot control: First- and second-order linear error dynamics, stability of a feedback control system.

UNIT - III GRASPING AND MANIPULATION OF ROBOTS 6

Kinematics of contact, contact types (rolling, sliding, and breaking), graphical methods for representing kinematic constraints in the plane, and form-closure grasping, Coulomb friction, friction cones, graphical methods for representing forces and torques in the plane, End effectors, grippers, types of gripper, gripper force analysis, and examples of manipulation and grasping.

UNIT – IV MOBILE ROBOTS 6

Mobile robot, Wheeled Mobile Robots: Kinematic models of omnidirectional and non-holonomic wheeled mobile robots, Controllability, motion planning, feedback control of non-holonomic wheeled mobile robots; odometry for wheeled mobile robots; and mobile manipulation. Reference Trajectory generation, feed forward control

UNIT – V APPLICATIONS OF ROBOTS 6

Application of robotic: industrial robots, Service robots, domestic and house hold robots, Medical robots, military robots, agricultural robots, space robots, Aerial robotics Role of robots in inspection, assembly, material handling, underwater, space and healthcare **TOTAL: 30 PERIODS**

MODERN ROBOTICS LABORATORY

Experiments

1. 3D modeling and motion simulation of rotational joint assembly
2. 3D modeling and motion simulation of prismatic joint assembly
3. 3D modeling and motion simulation of Cartesian robot
4. 3D modeling and motion simulation of articulated robot
5. 3D modeling and motion simulation of spherical robot
6. 3D modeling and motion simulation of cylindrical robot **TOTAL: 30 PERIODS**

TEXT BOOK:

1. Modern Robotics: Mechanics, Planning, and Control, by Kevin M. Lynch , Frank C. Park , Cambridge University Press; 1st edition (25 May 2017), ISBN-10 : 110715
2. Modern Robotics: Mechanics, Systems and Control, by Julian Evans, Larsen and Keller Education (27 June 2019), ISBN-10 : 1641720751

REFERENCES:

1. Modern Robotics: Designs, Systems and Control, by Jared Kroff, Willford Press (18 June 2019)ISBN-10 : 1682856763
2. Advanced Technologies in Modern Robotic Applications, by ChenguangYang , Hongbin Ma , Mengyin Fu, Springer; Softcover reprint of the original 1st ed. 2016 edition (30 May 2018), ISBN10 : 981109263X
3. Modern Robotics: Building Versatile Machines, by Harry Henderson, Facts On File Inc; Illustrated edition (1 August 2006), ISBN-10 : 0816057451
4. Artificial Intelligence for Robotics, by Francis X. Govers, Packt Publishing Limited; Standard Edition (30 August 2018), ISBN-10 : 1788835441
5. Modern Robotics Hardcover by Lauren Barrett (Editor), Murphy & Moore Publishing (1 March 2022), ISBN-10 : 1639873732

UNIT - I - INTRODUCTION

PART – A (2 Marks)

1. **What is ROBOT?**

   A robot is a machine, often programmable by a computer that can automatically carry out a series of complex actions.

2. **Define modern robotics.**

   Modern robotics encompasses the interdisciplinary field focused on designing, building, operating, and applying robots.

3. **What is the definition of robotics?**

   Robotics is a branch of engineering and computer science that involves the conception, design, manufacture and operation of robots.

4. **List out the advantages of robots.**

   - Greater flexibility, re-programmability, adjustable kinematic dexterity.
   - Greater response time to inputs than humans.
   - Improved product quality.

5. **List out the disadvantages of robots.**

   - Replacement of human labor.
   - More unemployment.
   - Significant retraining costs for both unemployed and users of new technology.

6. **List out the applications of robots.**

   - Depalletizing/palletizing
   - Transporting components
   - Machine loading/unloading Components

7. **What are the benefits of robotics?**

   - Increased productivity
   - Enhanced safety
   - Improved accuracy
   - Cost reduction.
   - Robots can work tirelessly, handle hazardous tasks, and perform repetitive jobs with precision, leading to greater efficiency and profitability for businesses.

8. **List out the needs of robots.**

   Robots are needed to enhance safety, productivity, and efficiency across various industries by performing tasks that are dangerous, repetitive, or require high precision.

9. **What are the major components for robot systems?**

   - Robot arm or Manipulator,
   - End of arm tools or end effector,

- Power source,
- Controller,
- Sensor.
- Actuator.

10. Define robot anatomy.

Robot anatomy refers to the study of a robot's physical structure, including its components, their arrangement, and how they interact to enable movement and functionality.

11. Define End-effectors.

These are the tools or grippers attached to the robot's manipulator, designed for specific tasks like grasping objects or performing operations.

12. Define Manipulator.

This refers to the arm-like structure of a robot, composed of links and joints, which is used to position the end-effector.

13. Define grippers.

A gripper is a device designed to grasp, hold, and manipulate objects.

14. List out the types of Grippers.

- Mechanical grippers
- Vacuum or suction cups
- Magnetic grippers
- Adhesive grippers

15. List out the types of joints.

- Linear joint (L),
- Rotational joint (R),
- Twisting joint (T)

16. Revolving joint (V).Define space topology.

A topological space is a set equipped with a structure, called a topology that defines the notion of closeness or open sets without relying on a distance function.

17. Define coordinate system.

A coordinate system is a method used to uniquely define the position of a point in space, whether it's a plane or three-dimensional space, using a set of numbers called coordinates.

18. List out the types of coordinate systems.

- Cartesian coordinate systems
- Cylindrical coordinate systems
- Spherical or Polar coordinate systems
- Articulated coordinate systems
- SCARA

19. What is mean by degrees of freedom in robotics?

In robotics, degrees of freedom (DOF) refer to the number of independent ways a robotic manipulator can move or be positioned in 3D space.

20. What are the different between task space and workspace?

- ✓ The task space is a mathematical space that defines the goal of the robot's task.
- ✓ The workspace is the set of all reachable configurations of the robot's end-effector.

PART – B & C

1. **Explain about the working of robot in detail.**

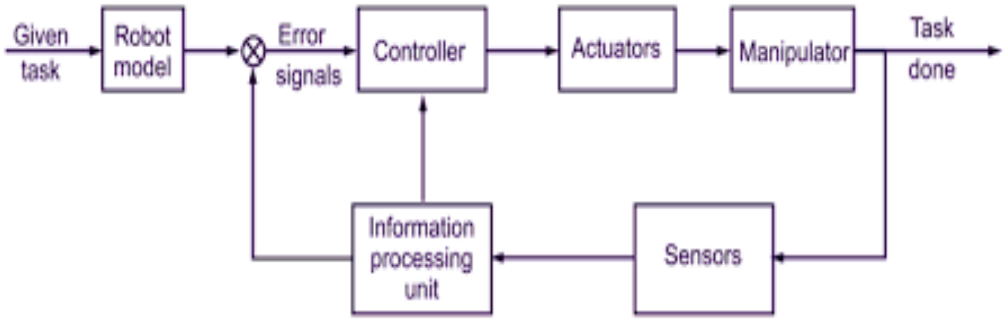

- ✓ Controller is the "brain" of the robot, responsible for processing information and making decisions.
- ✓ Sensor "senses," providing information about the environment and the robot's own state.
- ✓ Actuators are the "muscles" of the robot, responsible for producing movement and force.

Working

- ✓ The robot receives a task, either from a human operator or a pre-programmed sequence.
- ✓ The controller interprets the task and sends control signals to the appropriate actuators.
- ✓ The actuators move the robot's limbs or other components according to the instructions.
- ✓ Sensors monitor the robot's movement and the surrounding environment, providing feedback to the controller.
- ✓ The controller uses this feedback to make adjustments and ensure the task is performed accurately.
- ✓ The process repeats until the task is completed.

Advantages

- ✓ Greater flexibility, re-programmability, adjustable kinematic dexterity.
- ✓ Greater response time to inputs than humans.
- ✓ Improved product quality.
- ✓ Maximize capital intensive equipment in multiple work shifts.

Disadvantages

- ✓ Replacement of human labor.
- ✓ More unemployment.
- ✓ Significant retraining costs for both unemployed and users of new technology.
- ✓ Advertised technology does not always disclose some of the hidden disadvantages.

Applications:

- ✓ Depalletizing/palletizing
- ✓ Transporting components
- ✓ Bottle loading

  Machine loading/unloading Components
- ✓ Loading parts to CNC machine tool

2. Explain about the need for robot in detail.

(a) Speed

- ✓ Robots may be used because they are faster than people at carrying out tasks.
- ✓ This is because a robot is really a mechanism, which is controlled by a computer and we know that computers can do calculations and process data very quickly.
- ✓ Some robots actually move more quickly than we can, so they can carry out a task, such as picking up and inserting items, more quickly than a human can.

(b) Hazardous (dangerous) Environment

- ✓ Robots may be used because they can work in places where a human would be in danger.
- ✓ For example, robots can be designed to withstand greater amounts of heat radiation, chemical fumes than humans could.

c) Repetitive Tasks

- ✓ Sometimes robots are not really much faster than humans, but they are good at simply doing the same job over and over again.
- ✓ This is easy for a robot, because once the robot has been programmed to do a job once, the same program can be run many times to carry out the job many times. And the robot will not get bored as a human would.

(d) Efficiency

- ✓ Not wasting time, Not wasting materials and Not wasting energy

(e) Accuracy

- ✓ In a factory manufacturing items, each item has to be made identically. When items are being assembled, a robot can position parts within fractions of a millimeter.

(f) Adaptability

- ✓ Adaptability is where a certain robot can be used to carry out more than one task.
- ✓ A simple example is a robot being used to weld car bodies. If a different car body is to be manufactured, the program which controls the robot can be changed. The robot will then carry out a different series of movements to weld the new car body.

3. **Explain about the history of robot in detail.**

The history of robotics spans from ancient mythical and mechanical automatons to the sophisticated AI- powered machines of today, with key milestones including the coining of the term "robot" in the early 20th century, the development of the first industrial robots in the mid-20th century, and the integration of AI in the 21st century.

Early Concepts and Automation:

- **Ancient Times:**

  The concept of creating artificial beings has roots in ancient myths and legends, with examples like automatons built in ancient Greece and Egypt.

- **Early Mechanical Devices:**

  Water clocks with striking figures (3000 BC), a wooden pigeon that could fly (400 BC), and hydraulically operated statues that could speak and gesture were early examples of automated devices.

- **19th Century:**

  The Industrial Revolution saw the development of machines like the Jacquard loom, which used punch cards to automate weaving patterns, and early mechanical computers.

The Term "Robot" and Early Industrial Robotics:

- **1920:**

  The term "robot" was coined by Czech playwright Karel Čapek in his play R.U.R. (Rossum's Universal Robots), introducing the concept of artificial beings created to serve humans.

- **1954:**

  George Devol invented the first digitally controlled and programmable robot, known as Unimate.

- **1956:**

  Devol and Joseph Engelberger founded the first robot company, Unimation, and in 1961, Unimate became the first industrial robot to go online at a General Motors factory.

Modern Robotics and AI Integration:

- **1960s-1990s:**

  This era saw rapid innovation and expansion in robotics, with the development of mobile robots like Shakey, which could reason about its actions, and advancements in industrial robotics.

- **21st Century:**

  The integration of AI has significantly expanded the capabilities of robots, enabling them to learn, adapt, and make decisions autonomously. Examples include the Roomba, a robotic vacuum cleaner, and the use of robots in surgery.

Key Figures and Inventions:

- **George Devol:**

  Inventor of Unimate, the first industrial robot, and co-founder of Unimation.

- **Joseph Engelberger:**

  "Father of Robotics," he co-founded Unimation and played a key role in the commercialization of industrial robots.

- **Karel Čapek:**

  The playwright who coined the term "robot".

- **Isaac Asimov:**

  A science fiction writer who coined the term "robotics" and developed the Three Laws of Robotics.

4. Explain about the robot anatomy in detail.

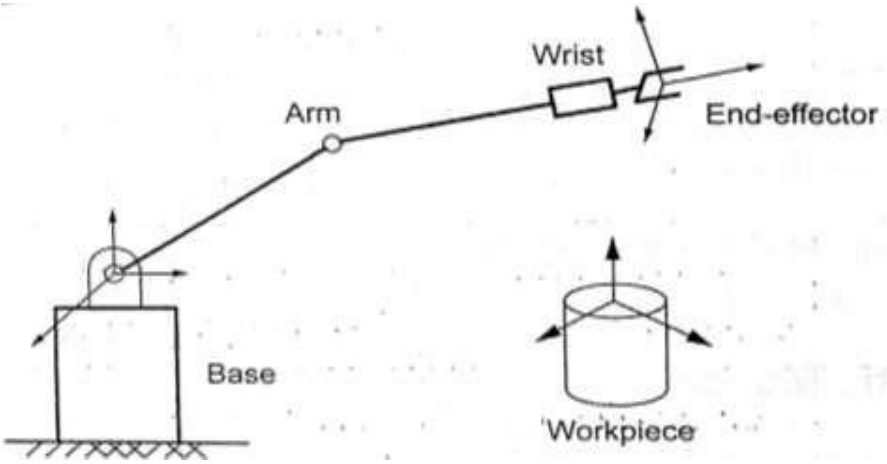

- ✓ Robot anatomy means: "Study of skeleton of robot (or) physical part"
- ✓ Robot anatomy focuses on the physical structure of a robot, including its components, configurations, and functionality. Key aspects include the manipulator (body and arm, and wrist), joints, links, and end effectors. Understanding robot anatomy is crucial for designing, building, and operating robots that can perform complex tasks.

Robotic Joints

- ✓ A robot joint is a mechanism that permits relative movement between parts of a robot arm.
- ✓ The joints of a robot are designed to enable the robot to move its end-effectors along a path from one position to another as desired.

Types of Joints:

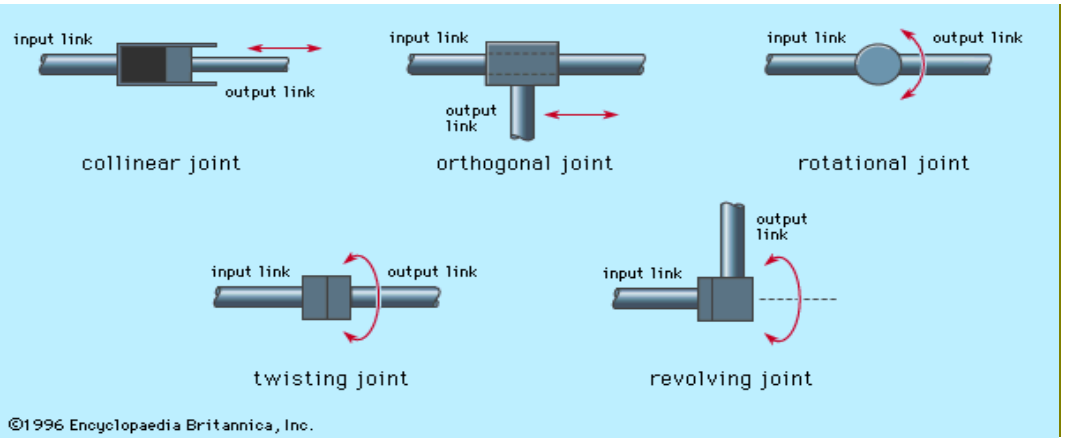

Robotic Movement

1. **Rotational movement:** This enables the robot to place its arm in any direction on a horizontal plane.
2. **Radial movement:** This enables the robot to move its end-effector radially to reach distant points.
3. **Vertical movement:** This enables the robot to take its end-effector to different heights.

Manipulator:

- ✓ A robot's manipulator is its body and arm assembly, which can have joints and links.
- ✓ The manipulator is responsible for positioning the end effector.
- ✓ The wrist is part of the manipulator and can have 2 or 3 DOFs.

End Effector:

- ✓ The end effector is the device at the end of the manipulator that interacts with the environment.
- ✓ Common end effectors include grippers for holding objects or tools for performing tasks.

Other Components:

- ✓ Actuators: Provide the power to move the robot's joints.
- ✓ Sensors: Provide the robot with information about its environment and its own state.
- ✓ Controllers: Manage the robot's movements and actions.
- ✓ Locomotive devices: Allow the robot to move around (e.g., wheels, legs).
- ✓ Power supply: Provides energy for the robot to operate.

5. Explain about the robot configuration (or) robot co-ordinate systems in detail.

✓ Industrial robots are available in a wide variety of sizes, shapes, and physical configurations.

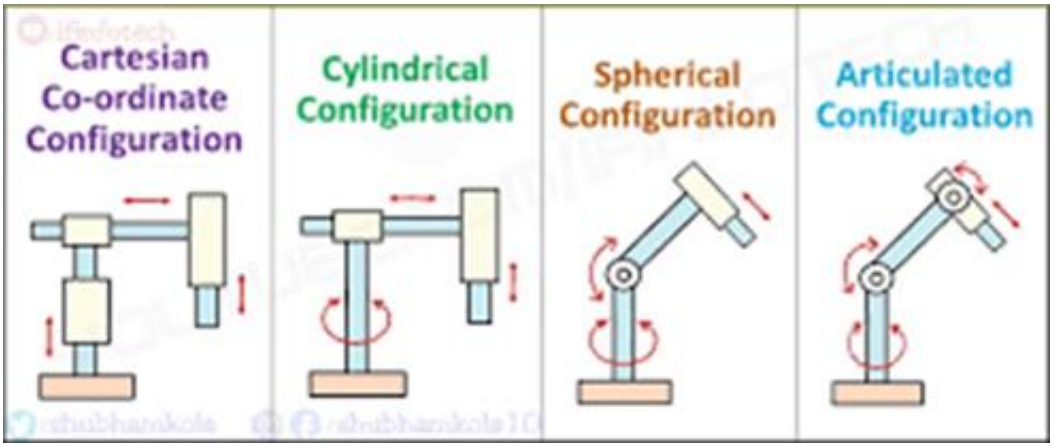

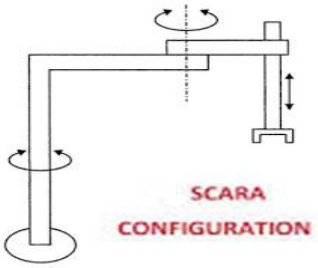

Polar Configuration (Or) Spherical Configuration

- ✓ It has three axes.
- ✓ One linear joint (3) and two rotary joints (1, 2).
- ✓ The rotational axis (1), the bent axis (2) and the reach axis (3).
- ✓ It also called spherical robots.

Advantages

- ✓ Simple design.
- ✓ High payloads.
- ✓ Light in weight.
- ✓ Easy to Programme.

Disadvantages

- ✓ Lower mechanical rigidity.
- ✓ More sophisticated control system than Cartesian or cylindrical.
- ✓ Limited vertical movement.

Applications

- ✓ Injection molding
- ✓ Forging
- ✓ Machine tool loading
- ✓ Material transfer

Cylindrical Configuration

- ✓ One rotary joint (1) and two linear joint (2 & 3).
- ✓ The rotational axis (1), up and down axis (2), and the reach or in and out axis (3).
- ✓ The cylindrical coordinate system incorporates three degree of freedom, or three axis.

Advantages

- ✓ Rigid structure
- ✓ Easy to program off-line
- ✓ Good repeatability and accuracy.

Disadvantages

- ✓ Lower mechanical rigidity.
- ✓ Repeatability and accuracy lower in direction of rotary movement.
- ✓ More sophisticated control system required than Cartesian.

Applications

- ✓ Load/unload
- ✓ Conveyor pallet transfers
- ✓ Material handling

Cartesian Coordinates

- ✓ Three linear joints
- ✓ Cartesian co-ordinates configuration consists of three slide joints, two of which are orthogonal.
- ✓ The three slides are parallel to the (1, 2, and 3) axes of the Cartesian coordinate system.
- ✓ All arm joints are linear (1, 2, 3).
- ✓ These are also called rectilinear or gantry robots.

Advantages

- ✓ Simple controls.
- ✓ Easy to visualize.
- ✓ Rigid structure.

Disadvantages

- ✓ Limited in movement.
- ✓ Requires large floor space for the large structure.
- ✓ Can only reach in front of itself.

Applications

- ✓ Assembly
- ✓ Surface finishing.
- ✓ Inspection.

Revolute (Or Articulated) Coordinates

- ✓ Three rotational axis or joints (1, 2, 3).
- ✓ The revolute or jointed coordinate system is identified by three axes:

1. Axis (waist rotation)
2. The axis (shoulder rotation) and
3. Axis (elbow rotation)

Advantages

- ✓ Most flexible.
- ✓ Flexible reach.
- ✓ Versatile configuration.

Disadvantages

- ✓ Sophisticated controller is required.
- ✓ Complex programming.
- ✓ Different locations in work envelope determine accuracy.

Applications

- ✓ Automatic assembly.
- ✓ In-process inspection.
- ✓ Machine vision.

Selected Compliance Assembly Robot Arm (Scara)

- ✓ Rotational axis (1 & 2) and linear axis (3).
- ✓ Work envelope similar to the cylindrical one.

Advantages

- ✓ Relatively inexpensive.
- ✓ Height axis is rigid. That gives well for insertion type of tasks.
- ✓ Good repeatability.

Disadvantages

- ✓ Difficult to program off-line.
- ✓ Complex arm.
- ✓ General Areas of Robotics.

6. List out the types of robots and types of industrial robots.

The types of robots are follows:

(a) Industrial Robot

- ✓ They have arms with gripper attached, which are fingers like and can grip or pick up various objects.
- ✓ They are used to pick and place.
- ✓ These robots can be programmed and computerized.
- ✓ Sensory, welding and assembly robots usually have a self-contained micro on minicomputer.

(b) Laboratory Robot

- ✓ They take many shapes and many things.
- ✓ They have microcomputers brain, multi joined arms, or advanced vision of tactile senses.

(c) Explorer Robots

- ✓ They are used to go where human cannot go or fear to tread, e.g. to explore caves, dive far deeper underwater and rescue people in sunken ships.
- ✓ They are sophisticated machine that have sensory systems and remotely controlled.

(d) Hobbyist Robots

- ✓ Most of the hobbyist robots are mobile and made to operate by rolling around on wheels propelled by electric motors controlled by an on boa microprocessor.
- ✓ Synthesis and speed recognition systems.

(e) Class Room Robots

- ✓ They are developed to assist the instructor in various aspects of the teach learning processors.

(f) Educational Robot

- ✓ They have the ability to speak and respond to the spoken word.
- ✓ They can be used to entertain the people at various events or operate as a revoking advertisement.

(g) Tele-Robots

- ✓ Tele robots are guided by human operators through remote control.

<u>Types of Industrial Robots</u>

1. **Sequence Robot**

- ✓ A manipulator which progresses successively through the various stages of an operation according to the predetermined sequence.

2. **Playback Robot**

- ✓ A manipulator which is able to perform an operation by reading out stored information for an operating sequence, which it learned beforehand by being taken manually through the routine.

3. **Intelligent Robot**

- ✓ A Robot which can determine its own behavior/conduct through its functions of sense and recognition.

4. **Repeating Robot**

- ✓ A manipulator performing an operation repeatedly, according to a rememorized work Programme.

7. Explain about Configuration space and degrees of freedom of rigid bodies and robots in detail.

Degrees of Freedom (DOF)

- ✓ The number of independent parameters or movements required to uniquely define the position and orientation of a body in space.

DOF of a Rigid Body

A rigid body is an object that does not deform. Its position and orientation in space can be described using:

- ✓ **Translation**: Movement along the X, Y, and Z axes (3 DOF)

- ✓ **Rotation**: Rotation about the X, Y, and Z axes (3 DOF)

In **3D space,** a rigid body has: **Degrees of Freedom** (3 translational + 3 rotational)
In **2D space**, a rigid body has: **3 Degrees of Freedom** (2 translational + 1 rotational)

DOF for Robots

- ✓ In robots, DOFs correspond to independent joint variables (e.g., angles for revolute joints, lengths for prismatic joints).
- ✓ A robot arm with 6 independently actuated joints has 6 DOFs.

Configuration Space (C-Space)

- ✓ It is the space of all possible configurations (positions and orientations) a robot (or a rigid body) can achieve.
- ✓ Each point in C-space represents a unique state or arrangement of the robot.

Examples:

A 2-joint planar robot arm:

- Each joint has 1 rotational DOF (θ_1, θ_2)
- Configuration = (θ_1, θ_2)
- C-space = 2D space (θ_1 vs θ_2)

C-Space Matters

C-space transforms robot motion planning problems into geometrical problems: Obstacles in the real workspace are transformed into C-space obstacles.

Special Considerations

- ✓ Redundancy: A robot is redundant if it has more DOFs than required (e.g., a 7-DOF robot arm operating in 6D space). This allows greater flexibility in avoiding obstacles or optimizing motion.
- ✓ Constraints: Mechanical limits, joint limits, or environmental constraints reduce the effective C-space.
- ✓ Degrees of Constraint (DOC): The difference between maximum possible DOFs and available DOFs gives insight into how constrained a system is.

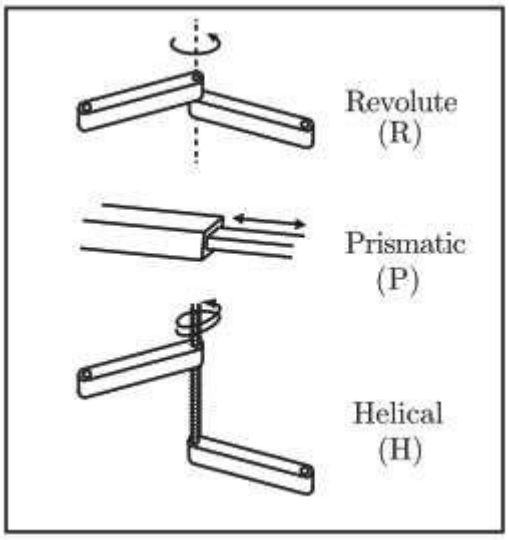

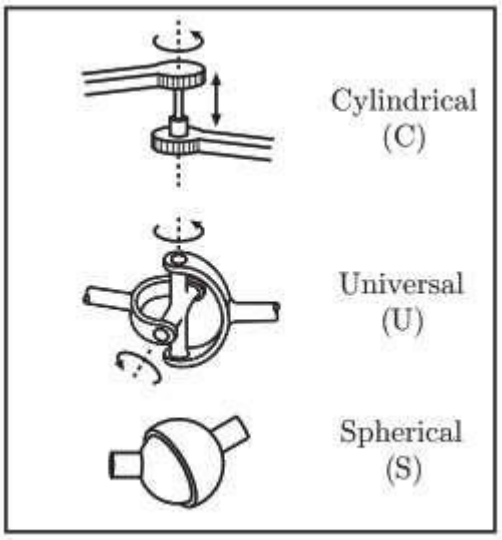

8. **Explain about Configuration space topology and representation in detail. Configuration Space Topology**

- ✓ Topology deals with the **geometric and continuity properties** of C-space that describe how configurations connect to each other.

Examples of topology:

- **Planar translation (x, y):** C-space is $\mathbb{R}^2$ (a plane).
- **Planar rotation (θ):** C-space is a circle S^1, since orientation is periodic (θ = 0 and θ = 2π are same).
- **Planar rigid body (x, y, θ):** C-space is $\mathbb{R}^2 \times S^1$.
- **Robot arm with 2 revolute joints:** C-space = $S^1 \times S^1$ (a torus).
- **General n-DOF revolute manipulator:** C-space = (S^1)^n (n-dimensional torus).

Configuration Space Representation

- ✓ To perform computations, we must have a numerical representation of the space, consisting of a set of real numbers.
- ✓ We are familiar with this idea from linear algebra – a vector is a natural way to represent a point in a Euclidean space.
- ✓ It is important to keep in mind that the representation of a space involves a choice, and therefore it is not as fundamental as the topology of the space, which is independent of the representation.

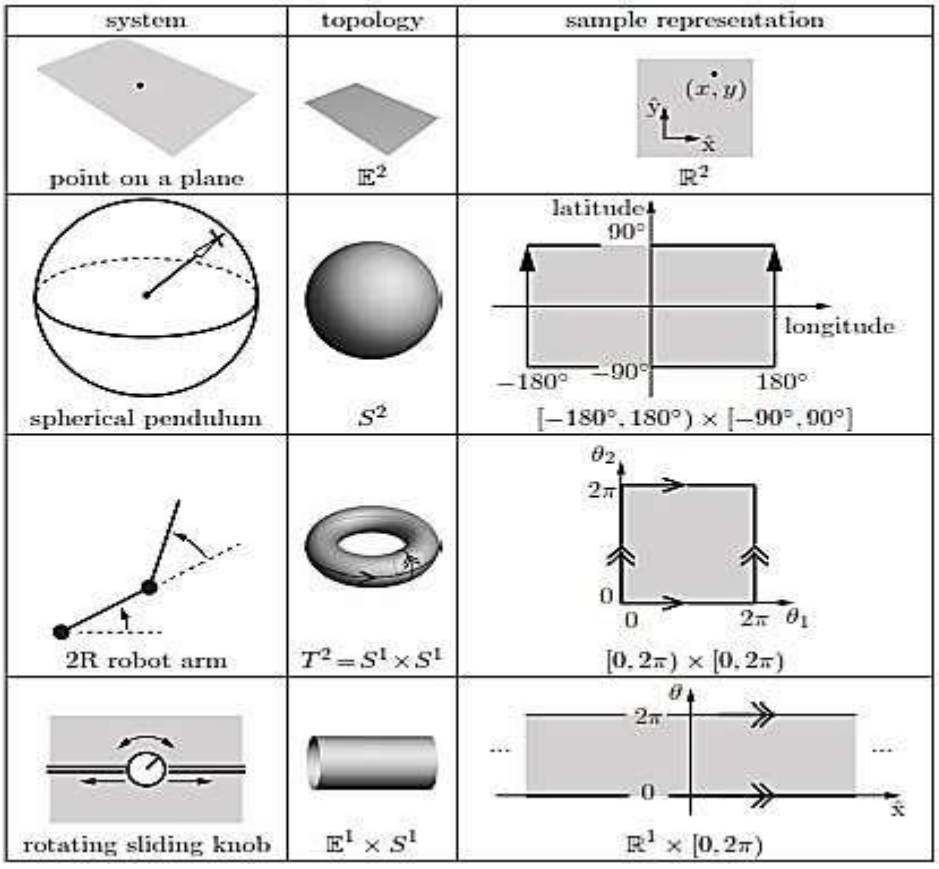

9. **Explain about configuration and velocity constraints in detail.**

Configuration

A **configuration** defines the complete position and orientation of a robot.

For an *n*-DOF robot, the configuration is represented by a vector:

$Q = [q1, q2, \ldots, qn]^T$

Where qi are the joint variables (angles or displacements).

Configuration constraints

These are restrictions on the possible values of qqq. They reduce the robot's available motion space.

1. **Geometric (holonomic) constraints**

   A point must always lie on a surface, or an arm joint limited to 0∘≤θ≤180∘

   f (q)=0

2. **Nonholonomic (differential) constraints**

   Constraints that cannot be expressed purely as algebraic equations of configuration; instead, they are expressed in terms of **derivatives of configuration variables** (velocities).

Example: A car-like robot cannot move sideways, even though its position (x,y)

Velocity constraints

They specify restrictions on the rate of change of configuration (joint velocities).

They arise due to:

Nonholonomic constraints (rolling, sliding restrictions)

Joint velocity limits (e.g., a motor's maximum speed)

Task requirements (e.g., constant velocity motion)

Types of velocity constraints

1. Kinematic velocity constraints

Example: For a rolling wheel with no slipping:

2. Joint velocity limits

Example: Each joint has a maximum allowable speed:

3. Task-space velocity constraints

Example: "End-effector must move only along X-axis,

Type	Definition	Example
Configuration Constraint (Holonomic)	Restricts robot's position/configuration	Joint limits, end-effector on a curve
Configuration Constraint (Nonholonomic)	Restricts motion but not directly configuration	Wheeled robot cannot move sideways
Velocity Constraint	Restricts allowable joint/task velocities	{q}i

10. Explain about Task Space and Workspace in detail.

Task Space

The task space (also called operational space) is the space in which the robot's end-effector is controlled to perform tasks.

Properties of task space

Dimension

Redundancy

Mapping

Velocity mapping

Example

- For a robotic arm assembling parts:
  - **Task space** variables: end-effector position (x, y, z) and orientation.
  - Controller works to ensure the end-effector follows the task trajectory.

Workspace

The **workspace** is the **region of space that the robot's end-effector can reach**.

It depends on:

Number and type of joints (revolute, prismatic)
Link lengths
Joint limits
Mechanical constraints

Types of workspace

Reachable workspace

The set of all points that the end-effector can reach (without considering orientation).

Dexterous workspace

Subset of workspace where the end-effector can reach **with all required orientations**.

Aspect	**Task Space**	**Workspace**
Definition	Space of variables describing the task (end-effector position & orientation)	Physical region robot's end-effector can reach
Coordinates	Cartesian position (x, y, z) + orientation (φ, θ, ψ)	Set of reachable points in 3D
Dimension	Up to 6 DOF (3 translational + 3 rotational)	Geometric 3D volume
Relation to joints	Related via forward kinematics (x = f(q))	Determined by robot geometry and joint limits
Example	Controlling the end-effector to weld along a straight line	All possible points the welding torch can reach

11. Explain about the Homogeneous transformation matrices in detail.

Homogeneous transformation matrices are a powerful mathematical tool used extensively in fields like computer graphics, robotics, and computer vision. They provide a unified and efficient way to represent and combine various 3D geometric transformations, including:

- ✓ **Translation:** Moving an object from one position to another.
- ✓ **Rotation:** Changing the orientation of an object around an axis.
- ✓ **Scaling:** Changing the size of an object.
- ✓ **Shearing:** Distorting an object along an axis.
- ✓ **Projection:** Mapping 3D points to a 2D plane (relevant in computer graphics).

Why "Homogeneous"?

The key to homogeneous transformation matrices lies in the concept of homogeneous coordinates. To enable all these transformations (especially translation, which cannot be represented as a simple 3x3 matrix multiplication in standard Cartesian coordinates) as matrix

multiplications, an extra dimension is added to the coordinates.

- ✓ A 2D point (x,y) becomes (x,y,1) in homogeneous coordinates.
- ✓ A 3D point (x,y,z) becomes (x,y,z,1) in homogeneous coordinates.

Structure of a Homogeneous Transformation Matrix

A homogeneous transformation matrix **in 3D is a** 4×4 matrix

General Structure (3D Case – 4×4 Matrix):

$$T = \begin{bmatrix} R & d \\ 0 & 1 \end{bmatrix}$$

Where:

$$T = \begin{bmatrix} r_{11} & r_{12} & r_{13} & d_x \\ r_{21} & r_{22} & r_{23} & d_y \\ r_{31} & r_{32} & r_{33} & d_z \\ 0 & 0 & 0 & 1 \end{bmatrix}$$

1. **Rotation Matrix R (3×3):**
   - The upper-left 3×3 sub-matrix.
   - Defines the orientation of the coordinate frame.
   - Must be **orthogonal** ($RR^T = I$) and $\det(R) = 1$.

$$R = \begin{bmatrix} r_{11} & r_{12} & r_{13} \\ r_{21} & r_{22} & r_{23} \\ r_{31} & r_{32} & r_{33} \end{bmatrix}$$

2. **Translation Vector d (3×1):**
   - The rightmost column (except the bottom element).
   - Represents displacement in **x, y, z** directions.

$$d = \begin{bmatrix} d_x \\ d_y \\ d_z \end{bmatrix}$$

3. **Homogeneous Row $[0\ 0\ 0\ 1]$:**

Computer Graphics:

- ✓ **Modeling:** Transforming objects (e.g., scaling a cube, rotating a character).
- ✓ **Viewing:** Placing and orienting the virtual camera in the 3D scene.
- ✓ **Projection:** Projecting 3D scenes onto a 2D screen.
- ✓ **Animation:** Creating smooth movements and transformations of objects over time.
- ✓ **Scene Graphs:** Organizing complex 3D scenes by chaining transformations together.

Computer Vision:

- ✓ Image Registration: Aligning different images of the same scene, often by transforming one image to match the other.

- ✓ Camera Calibration: Determining the intrinsic and extrinsic parameters of a camera, which involve transformations between the camera's coordinate system and the world coordinate system.
- ✓ 3D Reconstruction: Reconstructing 3D models from multiple 2D images, requiring transformations to relate the different camera views.
- ✓ Object Pose Estimation: Determining the 3D position and orientation of an object in an image or point cloud.

Advantages of Homogeneous Transformation Matrices

- ✓ Unified Representation: All rigid body transformations (translation, rotation, scaling, shearing) can be represented as a single matrix multiplication, simplifying calculations.
- ✓ Efficiency: Matrix multiplication is highly optimized in modern hardware and software, making these transformations very efficient for real-time applications.
- ✓ Coordinate Frame Changes: They allow for seamless conversion of points or vectors from one coordinate frame to another.

12. Explain about the exponential coordinates of rotation for robot in detail.

- ✓ In robotics, exponential coordinates provide a powerful and concise way to represent robot arm rotations
- ✓ This representation arises from the solution of a vector linear differential equation that describes the rotation of a rigid body at a constant angular velocity.

Relation to other representations

- ✓ **Rotation matrix (R):** A 3x3 matrix
- ✓ **Exponential coordinates:** A more compact and intuitive 3-parameter representation ($\omega\theta$)
- ✓ **Matrix exponential:** Maps elements
- ✓ **Matrix logarithm:** The inverse of the matrix exponential

Applications in robotics

- ✓ **Forward Kinematics:** The product of exponentials (POE) formula uses exponential coordinates to calculate the end-effector's position and orientation based on joint angles and screw axes.
- ✓ **Robot Joint Representation:** For revolute joints, the unit vector
- ✓ **Rigid-Body Motion:** Can be generalized to include translation by using 6-vector screw axes and the exponential coordinates
- ✓ **Optimization:** Offers an intuitive parameterization for robotics kinematics and dynamics, which only relies on a few parameters.

Advantages

- ✓ More compact than rotation matrices.
- ✓ Provide a physical and geometric interpretation of rotation.
- ✓ Useful in forward kinematics, particularly with the POE method.
- ✓ Help in defining robot joint movements in complex architectures.

UNIT – II - SIMULATION OF ROBOT KINEMATICS

PART – A (2 Marks)

1. **Define Robot Kinematics and types.**

- ✓ Robot kinematics is a fundamental area of robotics that deals with the study of a robot's motion without considering the forces and torques that cause the motion. It's essentially the geometry of robot movement.
- ✓ The two main types of robot kinematics are forward kinematics and inverse kinematics.

2. **List out the applications of robot kinematics.**

- ✓ Robot Design and Control: Essential for designing efficient robotic systems and developing control algorithms.
- ✓ Motion Planning: Planning collision-free paths for robots.
- ✓ Trajectory Optimization: Optimizing robot movements to minimize time, energy, or other factors.
- ✓ Simulation: Simulating robot motion before physical implementation.

3. **Define Forward Kinematics.**

Forward kinematics is a method in robotics and animation used to calculate the position and orientation (pose) of a robot's end-effector (e.g., gripper, tool) given the known joint angles and the robot's kinematic structure.

4. **Define Inverse Kinematics.**

Inverse kinematics (IK) is a method used to calculate the joint angles needed for a robotic arm or animation character's skeleton to reach a desired position and orientation.

5. **List out the Inverse Kinematics applications.**

Used in robot control, animation, and situations where the desired end-effector position is known.

6. **List out the advantage of robot kinematics.**

Implementing robot kinematics is its ability to enhance efficiency. By providing a framework for modeling and controlling robot motion, kinematics enables robots to perform tasks with a high degree of precision and repeatability.

7. **List out the disadvantage of robot kinematics.**

- ✓ Workspace and dexterity, and potential for singularities.
- ✓ Cost and Complexity
- ✓ Mass of Driven Load

8. **List out the Forward Kinematics applications.**

Used in simulations, collision detection, and when the desired end-effector position is not known but the joint movements are.

9. **Define Trajectory generation in robotics.**

Trajectory generation in robotics is the process of computing a robot's movement path over time, ensuring smooth, efficient, and safe motion while satisfying constraints like joint limits and obstacle avoidance.

10. Define motion planning in robotics.

Motion planning in robotics is the process of determining a sequence of robot movements (a trajectory) to achieve a specific task, while considering constraints like obstacles, robot capabilities, and desired goals.

11. Define robot control.

Robot control refers to the methods and systems used to manage and direct the movements and actions of robots.

12. What is mean by Denavit-Hartenberg (D-H) transformation?

Denavit-Hartenberg (DH) parameters are a systematic method to represent the kinematic chains of robotic arms. It then uses a set of four parameters.

13. List out the advantages of Denavit-Hartenberg (D-H) transformation.

- ✓ Systematic and Standardized
- ✓ Concise Representation
- ✓ Easy Forward Kinematics
- ✓ Widespread Adoption

14. List out the disadvantages of Denavit-Hartenberg (D-H) transformation.

- ✓ Singularities in Frame Assignment
- ✓ Lack of Physical Intuition for Frames
- ✓ Discontinuity Issues for Calibration
- ✓ Not Ideal for Parallel Robots

PART – B&C

1. Write short notes on Robot kinematics in detail.

Kinematics deals with the study of motion without considering the forces that cause it. In robotics, **robot kinematics** is the analysis of the position, velocity, and acceleration of robot manipulators, especially the movement of links and joints.

1. Types of Kinematics

Forward Kinematics (FK)

- ✓ Determines the **position and orientation** of the robot's end-effector given the joint parameters (angles for revolute joints, displacements for prismatic joints).
- ✓ It is straightforward and involves transformation matrices.
- ✓ Example: Given joint angles of a robotic arm, FK computes where the gripper is located in space.

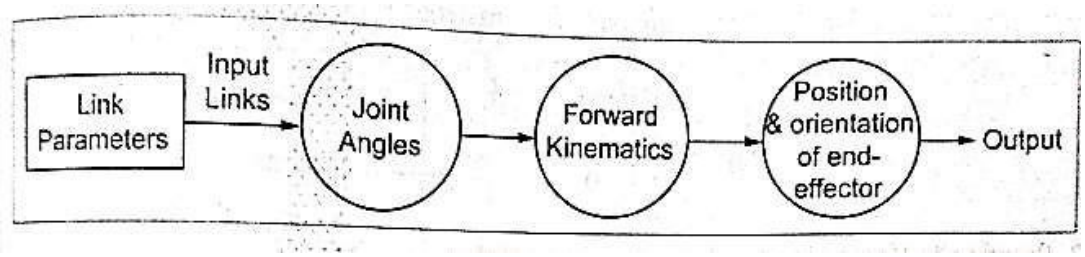

Inverse Kinematics (IK)

- ✓ Determines the **joint variables** needed to achieve a desired position and orientation of the end-effector.
- ✓ More complex because solutions may be **multiple, unique, or even infeasible**.
- ✓ Requires solving nonlinear equations.

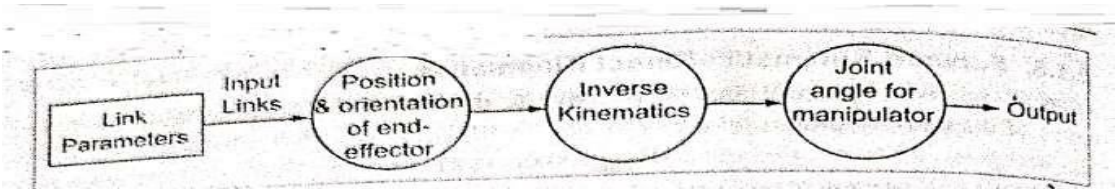

2. Representations in Kinematics

Coordinate Frames: Robots use coordinate systems to define positions and orientations.

Homogeneous Transformation Matrices (4×4): Combine rotation and translation in one matrix, used to represent link-to-link relationships.

Denavit–Hartenberg (D-H) Parameters: Standard method for representing joint-link relationships using four parameters (link length, link twist, link offset, joint angle).

3. Types of Robot Joints

- ✓ **Revolute Joint (R):** Rotation about an axis (like a hinge).
- ✓ **Prismatic Joint (P):** Linear motion along an axis.
- ✓ **Spherical, Cylindrical, and Screw Joints:** Allow combinations of movements.

4. Kinematic Chains

A robot manipulator is modeled as a **kinematic chain** of links (rigid bodies) connected by joints.

- ✓ **Open Chain:** Typical robotic arm with free-moving end-effector.
- ✓ **Closed Chain:** Parallel manipulators where loops are formed.

5. Workspace

- The **workspace** of a robot is the total volume that the end-effector can reach.
- Classified into:
- ✓ **Reachable Workspace:** All positions the end-effector can physically reach.
- ✓ **Dexterous Workspace:** Positions the end-effector can reach with all possible orientations.

6. Differential Kinematics

- ✓ Deals with **velocity and acceleration** of links and end-effector.
- ✓ Uses **Jacobian Matrix** to relate joint velocities to end-effector velocity.
- ✓ Important for trajectory planning and control.

7. Applications of Robot Kinematics

- ✓ Path and trajectory planning.
- ✓ Manipulation and positioning of objects.
- ✓ Motion control in industrial robots.
- ✓ Animation and simulation of robotic motion.

2. Explain about the Forward and inverse kinematics (two three four degrees of freedom) in detail. Understanding Degrees of Freedom (DOF)

1. Degrees of Freedom (DOF)

The number of **independent parameters (movements)** required to uniquely define the position and orientation of a robot or its end-effector.

Each joint contributes **1 DOF**:

Revolute Joint (R): Rotation around an axis.

Prismatic Joint (P): Linear translation along an axis.

In 3D space:

To describe **position (x, y, z)** → 3 DOF.

To describe **orientation (roll, pitch, yaw)** → 3 DOF.

Thus, a general manipulator requires **6 DOF** to fully position and orient its end-effector.

2. Forward Kinematics (FK)

Determines the **position and orientation** of the robot's end-effector given the joint parameters (angles for revolute joints, displacements for prismatic joints).

It is straightforward and involves transformation matrices.

Example: Given joint angles of a robotic arm, FK computes where the gripper is located in space.

3. Inverse Kinematics (IK)

Determines the **joint variables** needed to achieve a desired position and orientation of the end-effector.

More complex because solutions may be **multiple, unique, or even infeasible**.

Requires solving nonlinear equations.

4. Kinematics of Robots with Different DOF

(a) 2 DOF Manipulator

Example: **Planar 2-link robot arm**.

Forward Kinematics:

$x = L_1 \cos(\theta_1) + L_2 \cos(\theta_1+\theta_2)$

$y = L_1 \sin(\theta_1) + L_2 \sin(\theta_1+\theta_2)$

Inverse Kinematics:

Solve for θ_1, θ_2 from desired (x, y).

Multiple solutions possible (elbow-up or elbow-down configuration).

(b) 3 DOF Manipulator

Example: **Planar 3-link robot** or **SCARA robot**.

Forward Kinematics:

Extend 2 DOF case by adding another joint:

$x = L_1 \cos(\theta_1) + L_2 \cos(\theta_1+\theta_2) + L_3 \cos(\theta_1+\theta_2+\theta_3)$

$y = L_1 \sin(\theta_1) + L_2 \sin(\theta_1+\theta_2) + L_3 \sin(\theta_1+\theta_2+\theta_3)$

Inverse Kinematics:

More complex (trigonometric equations). Used for pick-and-place operations.

(c) 4 DOF Manipulator

Example: **Articulated arm with 3 rotational + 1 prismatic joint**.

Forward Kinematics:

Homogeneous transformation matrices applied sequentially for each joint (4×4).

Inverse Kinematics:

Requires solving nonlinear equations in multiple variables.

Provides **greater dexterity** than 2 or 3 DOF.

Often solved using **numerical methods** or closed-form approximations.

DOF	Example	Forward Kinematics	Inverse Kinematics
2 DOF	2-link planar arm	Simple trigonometric equations	Two possible solutions (elbow-up/down)
3 DOF	SCARA / 3-link arm	Extension of 2 DOF with extra joint	More complex, requires solving multiple trig. equations
4 DOF	Articulated arm	Transformation matrices (D-H method)	Complex, often multiple solutions or numerical methods

3. Explain about the Forward and inverse kinematics of velocity in detail.

1. Introduction

Position Kinematics: Relates joint variables (angles/displacements) to end-effector position/orientation.

Velocity Kinematics: Relates **joint velocities** to **end-effector linear and angular velocities**.

Based on the concept of the **Jacobian matrix**.

2. Forward Velocity Kinematics

Determines the **end-effector velocity** (linear + angular) given the **joint velocities**.

Mathematical Form

If a robot has "n" joints:

$\dot{x} = J(\theta) \cdot \dot{q}$

Where:

$\dot{x}$ = End-effector velocity vector (linear + angular).

J(θ) = Jacobian matrix (depends on joint angles θ).

$\dot{q}$ = Vector of joint velocities.

Jacobian Matrix

Each column of the Jacobian corresponds to the effect of one joint's motion on the end-effector velocity.

3. Inverse Velocity Kinematics

Determines the **joint velocities** required to achieve a desired **end-effector velocity**.

Mathematical Form

$\dot{q}=J+(\theta)\cdot\dot{x}$

Where J+ is the **pseudo-inverse** of the Jacobian.

4. Example (2-DOF Planar):

- End-effector position:

$$x = L_1 \cos\theta_1 + L_2 \cos(\theta_1 + \theta_2)$$

$$y = L_1 \sin\theta_1 + L_2 \sin(\theta_1 + \theta_2)$$

- Differentiate w.r.t. time:

$$\begin{bmatrix} \dot{x} \\ \dot{y} \end{bmatrix} = \begin{bmatrix} -L_1 \sin\theta_1 - L_2 \sin(\theta_1 + \theta_2) & -L_2 \sin(\theta_1 + \theta_2) \\ L_1 \cos\theta_1 + L_2 \cos(\theta_1 + \theta_2) & L_2 \cos(\theta_1 + \theta_2) \end{bmatrix} \begin{bmatrix} \dot{\theta}_1 \\ \dot{\theta}_2 \end{bmatrix}$$

Here, the **2×2 matrix is the Jacobian J.**

5. Applications

- ✓ Forward Velocity Kinematics:
- ✓ End-effector velocity prediction.
- ✓ Simulation and real-time monitoring.
- ✓ Inverse Velocity Kinematics:
- ✓ Trajectory tracking (ensuring end-effector follows a desired path).
- ✓ Motion planning.
- ✓ Control of redundant manipulators (e.g., humanoid robots).

4. Explain about the Homogeneous transformation matrices, translation and rotation matrices in detail.

1. Introduction

In robot kinematics, we need to describe the **position and orientation** of links and end-effectors.

Rotation matrices → describe orientation (rotation in space).

Translation matrices → describe displacement (movement in space).

Homogeneous transformation matrices → combine both rotation & translation into a single matrix for convenience.

2. Rotation Matrices

A **rotation matrix** is a square orthogonal matrix that describes the rotation of a coordinate frame in 2D or 3D.

- In **2D (about z-axis)**:

$$R(\theta) = \begin{bmatrix} \cos\theta & -\sin\theta \\ \sin\theta & \cos\theta \end{bmatrix}$$

- In **3D**:
  - **Rotation about x-axis**:

$$R_x(\theta) = \begin{bmatrix} 1 & 0 & 0 \\ 0 & \cos\theta & -\sin\theta \\ 0 & \sin\theta & \cos\theta \end{bmatrix}$$

  - **Rotation about y-axis**:

$$R_y(\theta) = \begin{bmatrix} \cos\theta & 0 & \sin\theta \\ 0 & 1 & 0 \\ -\sin\theta & 0 & \cos\theta \end{bmatrix}$$

  - **Rotation about z-axis**:

$$R_z(\theta) = \begin{bmatrix} \cos\theta & -\sin\theta & 0 \\ \sin\theta & \cos\theta & 0 \\ 0 & 0 & 1 \end{bmatrix}$$

3**. Translation Matrices**

Translation matrices represent **linear displacement** along coordinate axes.

- In **2D**:

$$T(x, y) = \begin{bmatrix} 1 & 0 & x \\ 0 & 1 & y \\ 0 & 0 & 1 \end{bmatrix}$$

- In **3D**:

$$T(x, y, z) = \begin{bmatrix} 1 & 0 & 0 & x \\ 0 & 1 & 0 & y \\ 0 & 0 & 1 & z \\ 0 & 0 & 0 & 1 \end{bmatrix}$$

4. Homogeneous Transformation Matrices

A **homogeneous transformation matrix (HTM)** is a **4×4 matrix** that combines **rotation** and **translation** into one matrix.

General form:

$$T = \begin{bmatrix} R & d \\ 0 & 1 \end{bmatrix}$$

Where:

- R = 3×3 rotation matrix.
- $d = \begin{bmatrix} x & y & z \end{bmatrix}^T$ = translation vector.

Example in 3D:

$$T = \begin{bmatrix} r_{11} & r_{12} & r_{13} & x \\ r_{21} & r_{22} & r_{23} & y \\ r_{31} & r_{32} & r_{33} & z \\ 0 & 0 & 0 & 1 \end{bmatrix}$$

5. Advantages

- ✓ Can represent both **position and orientation** together.
- ✓ Allows easy **concatenation** of multiple transformations (matrix multiplication).
- ✓ Widely used in **Denavit–Hartenberg (D-H) convention** for robot kinematics.

6. Applications

- ✓ Representing motion of robot links.
- ✓ Coordinate frame transformations.
- ✓ Forward kinematics (link-to-link transformations).
- ✓ Computer graphics, aerospace, biomechanics.

5. Explain about the Denavit-Hartenberg (D-H) transformation in detail.

Denavit–Hartenberg (D-H) Transformation, which is one of the most important formalisms in robot kinematics.

1. Introduction

- ✓ In robotics, the position and orientation of a manipulator's end-effector relative to its base must be determined. For an n-link robot, each link is connected through joints (rotational or prismatic).
- ✓ The Denavit–Hartenberg (D-H) convention, introduced by Jacques Denavit and Richard Hartenberg in 1955, is a standard way to assign coordinate frames and represent link transformations with only four parameters.

2. Basic Idea

- ✓ Each link is associated with a coordinate frame.
- ✓ The relative transformation between two successive link frames is expressed as

Homogeneous transformation matrix.

- ✓ Instead of using 6 parameters (3 for translation + 3 for rotation), the D-H convention reduces this to **4 parameters** by choosing coordinate axes systematically.

3. D-H Parameters

- ✓ ai (Link length)
- ✓ αi (Link twist)

- ✓ di (Link offset)
- ✓ θi (Joint angle)

4. D-H Homogeneous Transformation Matrix

The transformation from frame $(i-1)$ to frame i is given as:

$$T_i^{i-1} = \begin{bmatrix} \cos\theta_i & -\sin\theta_i\cos\alpha_i & \sin\theta_i\sin\alpha_i & a_i\cos\theta_i \\ \sin\theta_i & \cos\theta_i\cos\alpha_i & -\cos\theta_i\sin\alpha_i & a_i\sin\theta_i \\ 0 & \sin\alpha_i & \cos\alpha_i & d_i \\ 0 & 0 & 0 & 1 \end{bmatrix}$$

This matrix is a product of four basic transformations:

1. Rotate by θ_i about z_{i-1}.
2. Translate by d_i along z_{i-1}.
3. Translate by a_i along x_i.
4. Rotate by α_i about x_i.

5. Forward Kinematics Using D-H Convention

For an n-link manipulator:

$$T_0^n = T_0^1 \cdot T_1^2 \cdot T_2^3 \cdot \ldots \cdot T_{n-1}^n$$

Where:

- T_0^n = transformation from base to end-effector.
- Each T_i^{i-1} is computed using the 4 D-H parameters.

Thus, the overall **forward kinematics** can be derived easily.

6. Standard Procedure

1. Assign coordinate frames using D-H rules:
2. Identify the four D-H parameters.
3. Write each T_i^{i-1}.
4. Multiply to get the final transformation.

7. Example (2-Link Planar Robot)

This gives the final end-effector position:

$$x = a_1\cos\theta_1 + a_2\cos(\theta_1+\theta_2)$$

$$y = a_1\sin\theta_1 + a_2\sin(\theta_1+\theta_2)$$

Which is exactly the forward kinematics for a 2R arm.

8. Advantages of D-H Method

- ✓ Standardized representation for all manipulators.

- ✓ Reduces complexity (only 4 parameters needed).
- ✓ Systematic approach, easy for programming and automation.

9. Limitations

- ✓ Sometimes inconvenient for complex or parallel robots.
- ✓ Frame assignment can be ambiguous in certain geometries.
- ✓ Modified D-H convention (Craig's method) is often preferred in modern robotics for better clarity.

6. Explain about the Dynamics of Open Chains, Trajectory Generation, and motion planning and robot control in detail.

1. Dynamics of Open Chains

An **open-chain robot** is one in which links are connected in a serial fashion (like most industrial manipulators). The dynamics describes how forces and torques affect motion.

(a) Dynamic Modeling Approaches

- **Newton–Euler formulation**

  Uses recursive computation of forces and accelerations link by link.

- **Lagrangian formulation**

  Based on energy methods:

  L= K−P where K = kinetic energy, P = potential energy.

(b) Robot Dynamics Equation

$$\tau = M(q)\ddot{q} + C(q,\dot{q})\dot{q} + G(q) + F(\dot{q})$$

- $M(q)$: Inertia matrix (symmetric, positive definite)
- $C(q,\dot{q})$: Coriolis and centrifugal matrix
- $G(q)$: Gravity vector
- $F(\dot{q})$: Friction forces
- τ: Joint torque vector

This model is the basis for control and simulation.

2. Trajectory Generation

Trajectory generation determines **how the robot moves from start to goal** while respecting kinematic and dynamic constraints.

(a) Joint Space Trajectory

- Motion is planned in joint coordinates.

- Typical methods:
  - **Polynomial interpolation** (cubic, quintic) → ensures smooth position, velocity, and acceleration.
  - **Trapezoidal velocity profiles** → acceleration, constant velocity, and deceleration phases.
  - **S-curve profiles** → smooth jerk reduction.

(b) Cartesian Space Trajectory

- Planning is done in **end-effector space** (task space).
- Interpolation between waypoints in straight lines or curves (e.g., circular, spline).
- Requires **inverse kinematics** to convert to joint motions.

(c) Constraints

- Joint limits (max/min angle)
- Velocity, acceleration, jerk limits
- Collision avoidance

3. Motion Planning

Motion planning ensures **collision-free paths** in the workspace while considering kinematic and dynamic feasibility.

(a) Types

- **Configuration Space (C-space)**: Each robot pose is represented by a point in nnn-dimensional space. Obstacles are mapped into forbidden regions in C-space.
- **Roadmap Methods** (PRM – Probabilistic Roadmap, RRT – Rapidly-exploring Random Trees): Useful for high DOF robots.
- **Grid/Cell Decomposition**: Workspace divided into grids; path search using A*.
- **Optimization-based planning**: Trajectory optimized for time, energy, or smoothness.

4. Robot Control

Control ensures that the robot **follows desired trajectories** accurately despite uncertainties.

(a) Types of Control

1. **Joint (Decentralized) Control**
   - Each joint controlled independently.
   - Example: PID controllers.
   - Simple, but ignores coupling effects.
2. **Computed Torque Control (Model-based)**
   - Uses dynamic model:

3. **Adaptive Control**

- Adjusts control parameters when model parameters (mass, friction) are uncertain.

4. **Robust Control**

- Ensures stability under disturbances and unmodeled dynamics.

5. **Hybrid Position/Force Control**

- Used when robot interacts with environment (e.g., polishing, assembly).
- Controls motion along free directions and force along constrained directions.

6. **Impedance/Admittance Control**

- Regulates dynamic interaction between robot and environment (soft and safe behavior).

7. Explain about the stability of a feedback control system for robot in detail.

1. Meaning of Stability

In robotics, stability refers to the ability of the feedback control system to ensure that:

- The robot follows the desired trajectory or reaches the target state.
- Any deviations (due to disturbances, modeling errors, noise) die out over time instead of growing.
- The system behaves predictably and safely under feedback control.

2. Equilibrium and Stability Concepts

- Equilibrium point: A state where the system remains if undisturbed (e.g., desired joint position).
- Stability types:
  - Lyapunov Stability: Small initial deviations stay small.
  - Asymptotic Stability: Deviations not only stay small but decay to zero with time.
  - Exponential Stability: Deviations decay exponentially fast.
  - Instability: Deviations grow with time → robot oscillates, diverges, or even becomes unsafe.

3. Role of Feedback Control in Stability

Robotic manipulators are nonlinear, coupled systems. Feedback control is applied to:

- Compensate for dynamic effects (inertia, Coriolis, gravity).
- Ensure tracking of reference trajectories.
- Reject disturbances.

4. Factors Affecting Stability

1. Controller gains (e.g., too high → oscillations, too low → sluggish).
2. Robot dynamics (highly nonlinear, configuration-dependent).
3. Time delays and sampling in digital controllers.
4. Unmodeled dynamics (flexible links, friction, backlash).
5. External disturbances (payload changes, environment contact).

8. Explain about the First- and second-order linear error dynamics for robot in detail.

Linear error dynamics for a robot describe how the error between the robot's actual and desired states evolves over time. These dynamics are typically modeled using linear ordinary differential equations (ODEs), which can be first- or second-order. Analyzing the error dynamics is crucial for designing controllers that drive the robot's error to zero, ensuring stability, and achieving the desired performance.

First-order linear error dynamics

First-order error dynamics are the simplest model, assuming that the robot's inertial effects are negligible relative to its damping and stiffness. This model is often used for highly-damped systems, such as some soft robots, where inertia is not a dominant factor.

$$\dot{e}(t) + Ke(t) = 0$$

Second-order linear error dynamics

Second-order dynamics are a more comprehensive model, accounting for the robot's inertia, damping, and stiffness. It is analogous to a classical mass-spring-damper system, which serves as a common analogy for a controlled robot joint.

$$\ddot{e}(t) + K_d\dot{e}(t) + K_p e(t) = 0$$

Characteristics of response (Damping ratio)

- ✓ Over damped
- ✓ Critically damped
- ✓ Underdamped

Feature	**First-Order Dynamics**	**Second-Order Dynamics**
Physical Model	Simple spring-damper with no inertia.	Mass-spring-damper system.
Complexity	Simpler model, easier to compute.	More complex, provides a richer model of behavior.
Response Type	Always non-oscillatory and non-overshooting.	Can be over damped, critically damped, or underdamped. Exhibits oscillation and overshoot when underdamped.
Damping	Assumes high damping and low inertia, as is the case for some soft robots.	Explicitly models inertia and damping to show their combined effect.
Applications	Simple positioning tasks, modeling highly-damped systems, or for quick-and-dirty control implementations.	Most conventional robotic systems, where dynamic properties like inertia are significant.

UNIT - III

GRASPING AND MANIPULATION OF ROBOTS

PART –A (2 Marks)

1. **Define robot grasping.**

   Robotic grasping refers to the ability of a robot to securely hold and manipulate objects using its end- effector, typically a gripper or robotic hand.

2. **Define Kinematics of contact and types**

   Kinematics of contact describes the relative motion between two contacting surfaces, focusing on the position, velocity, and acceleration of the contact point(s) as they move against each other.

   - Rolling contact
   - Sliding contact
   - Breaking contact

3. **Define rolling contact.**

   Rolling contact is a type of motion where one body rolls over another without any sliding at the point of contact.

4. **Define sliding contact.**

   Sliding contact occurs the interaction between two bodies that move relative to one another by rubbing or sliding across their shared surface.

5. **Define breaking contact.**

   Breaking contact is the dynamic event where two or more bodies that were in contact with each other separate and transition to a state of free motion.

6. **Define Form-closure grasping.**

   Form-closure grasping is a method of holding an object in a robotic gripper or fixture where the object is geometrically and completely constrained, regardless of the application of external forces

7. **Define Coefficient of Friction.**

   - It is ratio between the frictional forces to the normal force. $\mu = F/N$

8. **Define Coulomb friction.**

   Coulomb friction, also known as dry friction or sliding friction, is the force that opposes the relative motion of two solid surfaces in contact.

9. **Define friction cone.**

   A friction cone is a graphical representation of the forces acting on a body in contact with a surface, specifically showing the range of resultant forces that can be applied before the body begins to slide.

10. **What is mean by End effectors?**

    In robotics, an end effector is the device or tool attached to the end of a robotic arm that interacts with the environment to perform specific tasks.

11. List out the examples of robot end effector.

- Gripper
- End of arm tooling
- Tools
- Welding equipment

12. What is mean by gripper?

A gripper is a device designed for grasping, holding, or gripping objects.

13. List out the types of mechanical grippers.

- Mechanical finger grippers
  - Single gripper
  - Dual gripper
- Multiple gripper
- Expandable gripper
- Internal gripper
- External gripper

14. Define manipulation.

Manipulation in robotics refers to the ability of a robot to control the position and orientation of an object. It's about moving an object from one place to another, or changing its orientation, without necessarily holding it firmly throughout the entire process.

15. Define grasping.

Grasping is a specific type of manipulation that involves physically holding (or) Seizing an object, typically with a gripper or end effector.

16. Define gripper force analysis.

Gripper force analysis involves determining the forces that a robot's gripper needs to apply to hold an object securely without causing damage or slippage.

PART – B & C

1. Discuss about the Kinematics of contact and Explain about the contact types

Kinematics of contact

- Kinematics of contact is a branch of kinematics that describes the motion of a point of contact between two objects as they move relative to each other.
- It focuses purely on the geometry of motion, without considering the forces causing that motion (which would be the domain of dynamics of contact).

Key aspects of kinematics of contact include:

- **Relative motion:** The primary concern is the relative velocity and angular velocity between the two contacting bodies at the point of contact.
- **Surface geometry:** The local curvature and orientation of the surfaces at the contact point play a crucial role in determining the type of contact and the resulting motion.
- **Constraints:** The contact itself imposes kinematic constraints on the relative motion of the objects. For example, two rigid bodies cannot interpenetrate.
- **Applications:** It's fundamental in fields like robotics (grasping, manipulation), mechanism design (gears, cams), biomechanics (joint movement), and vehicle dynamics.

Kinematics of contact types

Based on the relative motion at the point of contact, contact can be classified into three main types:

- Rolling
- Sliding
- Breaking

1. Rolling Contact

Rolling contact is a type of motion where one body rolls over another without any sliding at the point of contact.

Characteristics:

- **No relative velocity at contact point:** The velocity of the point on body 1 that is in contact is equal to the velocity of the point on body 2 that is in contact: v1=v2.
- **Pure rolling:** When there is no slipping, it's often referred to as pure rolling.
- **Reduced wear:** Due to the absence of relative sliding, rolling contact generally results in minimal wear and friction compared to sliding contact.

Examples:

- A wheel rolling on a road without skidding.
- Gears meshing perfectly.
- A ball rolling across a surface.

Degrees of Freedom (DOF): Pure rolling contact imposes more constraints on the motion than sliding contact. For 3D motion, it typically imposes three equality constraints (two for translational velocities and one for angular velocity about the normal).

2. Sliding Contact

Sliding contact occurs the interaction between two bodies that move relative to one another by rubbing or sliding across their shared surface.

Characteristics:

- **Relative velocity at contact point:** The velocity of the point on body 1 at contact is not equal to the velocity of the point on body 2 at contact.
- **Friction:** Sliding contact is always associated with friction, which opposes the relative motion.
- **Wear and heat generation:** Due to the relative motion and friction, sliding contact typically generates heat and leads to wear of the contacting surfaces.

Examples:

- A block being pushed across a table.
- Brakes in a car (where brake pads slide against a rotor).

Degrees of Freedom (DOF): Sliding contact imposes fewer constraints than rolling contact. For 3D motion, it imposes one equality constraint (that the surfaces do not interpenetrate, i.e., the relative velocity normal to the surface is zero)

3. Breaking Contact

Breaking contact is the dynamic event where two or more bodies that were in contact with each other separate and transition to a state of free motion.

Characteristics:

- **Separation:** The surfaces are no longer in contact, and there is no constraint on their relative motion, except that they cannot interpenetrate.
- **Normal velocity:** The relative velocity between the two surfaces at the point where they were in contact has a component that is moving them away from each other (i.e., the normal component of relative velocity is positive, pointing outwards from the surface of one body into the other).
- **No force transmission (in normal direction):** Once contact breaks, no normal compressive force can be transmitted between the surfaces.

Examples:

- A ball leaving the ground after being thrown or bounced.
- A vehicle wheel lifting off the road during a bump.
- A robotic gripper releasing an object.

Degrees of Freedom (DOF): When contact breaks, the kinematic constraint is removed. The bodies can move freely relative to each other (subject to other constraints in the system).

2. **Explain about the graphical methods for representing kinematic constraints in the plane in detail.**

In **planar kinematics**, every rigid body has **3 degrees of freedom (DOF)**:

- Translation along the **x-axis**
- Translation along the **y-axis**
- Rotation about the **z-axis (perpendicular to the plane)**

When two or more bodies are connected in a mechanism, their **relative motion is restricted** by constraints.

Concept of Graphical Representation of Constraints

A **constraint** is something that removes one or more degrees of freedom. In planar diagrams, we represent these constraints graphically by:

- **Lines** (to indicate permissible or restricted directions of motion)
- **Geometric symbols** (to show types of joints)
- **Velocity/acceleration polygons** (to visualize motion restrictions)

Graphical Methods for Velocity Constraints

In planar kinematics, the **velocity of a point** is often restricted by geometry. These are represented graphically as **constraint lines**:

1. **Sliding Joint (Prismatic Constraint):**

    - A slider moving in a straight guide can only move **along the guide**.
    - Velocity vector must lie **along the guide line**.

2. **Revolute Joint (Pin Constraint):**

    - A point attached to a rotating link has velocity **perpendicular to the link**.
    - Graphically represented by a line **normal to the link** at that point.

3. **Rolling/Contact Constraints (Higher Pairs):**

    - Velocity directions at contact points are shown by **common tangents** or normal, depending on rolling or sliding condition.

Graphical Methods in Mechanism Analysis

Some classical graphical constructions for planar constraints are:

(a) **Velocity Polygon Method**

- Used to find velocities of all links in a mechanism.
- Each velocity constraint is represented by a line in a velocity diagram.

(b) **Kennedy's Theorem of Three Instantaneous Centers**

- States: For any **three bodies in planar motion**, the three instantaneous centers of rotation (ICs) must lie on a straight line.
- This provides a **graphical way** to locate relative centers of rotation, which represent kinematic constraints.

(c) **Klein's Construction**

- Special graphical construction for the **slider-crank mechanism**.
- Allows determination of velocities and accelerations of piston and connecting rod geometrically.

3. **Explain about the Form-Closure Grasping in detail.**

Form-closure grasping is a method of holding an object in a robotic gripper or fixture where the object is geometrically and completely constrained, regardless of the application of external forces

Characteristics of Form-Closure

- **Purely geometric constraint:** Immobilization is achieved by the physical shape of contacts, not by friction.
- **Rigid immobilization:** Once achieved, the object cannot move infinitesimally in any direction.
- **Number of contacts required:**
  - In **2D (planar case):** Minimum **3 contacts** are needed for form-closure.
  - In **3D (spatial case):** Minimum **7 contacts** are required.
- **Independent of friction:** Even with frictionless contacts, the object is still held.

Mathematical Condition

- An object has **n degrees of freedom (DOF)**:
  - **2D object:** 3 DOF (x, y, rotation θ).
  - **3D object:** 6 DOF (x, y, z, and 3 rotations).
- To achieve **form-closure**, the grasp must provide constraints that eliminate all these DOFs.

Types of Form-Closure Grasp

1. **First-order form-closure (weak form-closure):**

   - Object is immobilized against small perturbations in certain directions but may still slip in others.
   - Example: A peg in a hole with some clearance.

2. **Second-order form-closure (true form-closure):**

- Object is fully constrained in all possible motions.
- Example: A cube tightly fitted inside a box by multiple fixtures.

Advantages of Form-Closure

- Does not depend on friction (reliable even if surfaces are smooth or slippery).
- Provides **stable and rigid immobilization**.
- Useful in **fixturing** and **mechanical design of clamps**.

4. Explain about friction cones in detail.

Friction Cones

The friction cone is a fundamental concept in mechanics, particularly when analyzing the interaction between two surfaces in contact. It helps us understand the range of possible forces that can be exerted at a frictional contact point without causing sliding.

Here's a detailed explanation of the friction cone:

- **Normal Force (N):** This force acts perpendicularly *out* of the contact surface. It represents the force pushing the two surfaces together.
- **Frictional Force (Ff):** This force acts *parallel* to the contact surface and opposes any relative motion or tendency of motion between the surfaces.
- **Static Friction:** When the object is at rest and an external force is applied, static friction acts to prevent motion. Its magnitude can vary from zero up to a maximum value.
- **Kinetic Friction:** Once the object starts sliding, kinetic friction acts against the motion. Its magnitude is generally constant and slightly less than the maximum static friction.
- **Coefficient of Friction (μ):** This dimensionless coefficient relates the maximum frictional force to the normal force.
  - μ_s for static friction (maximum static friction $F_{t.max} = \mu_s N$
  - μ_k for kinetic friction ($F_f = \mu_k N$)
- **Resultant Contact Force (R):** This is the vector sum of the normal force and the frictional force: $R=N+F_f$

The Cone:

When the object is at the verge of sliding, the frictional force reaches its maximum value

$F_{t.max} = \mu_s N$

- The resultant contact force, R, will then lie on the surface of an imaginary cone.
- The axis of this cone is along the direction of the normal force.

Interpretation

This angle is often called the angle of friction.

Inside the Cone: If the resultant contact force falls within the friction cone, it means that the applied forces are not enough to overcome the static friction, and the object will remain at rest.

5. Explain about graphical methods for representing forces and torques in the plane in detail.

1. Force Representation in the Plane

A force is a **vector** with three essential properties:

- **Magnitude** (how strong)
- **Direction** (line of action)
- **Point of application**

2. Graphical Methods for Forces

(a) **Parallelogram Law of Forces**

- Two forces acting at a point can be represented by **two adjacent sides** of a parallelogram.
- The **diagonal** of the parallelogram gives the **resultant force** (magnitude + direction).

(b) **Triangle Law of Forces**

- If two forces act on a body at a point, they can be represented by two sides of a triangle (drawn in order).
- The closing side of the triangle gives the **resultant**.

(c) **Polygon Law of Forces**

- For more than two concurrent forces.
- Forces are represented one after the other in sequence (head-to-tail method).
- The closing side of the polygon gives the **resultant force**.

(d) **Force Polygon (Graphical Equilibrium Method)**

- If a body is in equilibrium, the **force polygon must close**.
- Useful in **truss analysis** and **mechanism equilibrium**.

3. Torque (Moment) Representation in the Plane

Torque (moment):

$M=F\cdot d$

Where F = force, d = perpendicular distance from point/axis.

A torque is a **vector perpendicular to the plane**, but in 2D it is represented as:

Clockwise (–) or **Counterclockwise (+)** arrow around a point.

4. Graphical Methods for Forces and Torques Together

Free Body Diagram (FBD)

- A graphical sketch showing all external forces and torques acting on a body.
- Forces are arrows, torques are curved arrows.
- Used in equilibrium analysis.

6. Explain about the end effector in detail.

1. Definition

- The **end effector** is the device or tool that is mounted at the end of a robotic manipulator (arm).
- It is the "hand" of the robot, designed to interact with objects, tools, or the environment.
- It can be **mechanical (grippers)**, **process-oriented (welders, sprayers)**, or **sensors**.

2. Classification of End Effectors

End effectors can be classified into **two major types**:

(A) Grippers **(Used to hold, grasp, or release objects.)**

Types:

1. **Mechanical Grippers (Finger-type)**
    - Use jaws/fingers to grip objects.
    - Actuated by pneumatic, hydraulic, or electric drives.
    - Common in pick-and-place robots.
2. **Vacuum (Suction) Grippers**
    - Use suction cups with vacuum pumps.
    - Suitable for handling sheet metal, glass, plastic sheets, etc.
3. **Magnetic Grippers**
    - Use electromagnets or permanent magnets.
    - Best for handling ferromagnetic materials.
4. **Adhesive Grippers**
    - Use sticky or electro-adhesive surfaces to pick lightweight parts.
    - Applied in electronics and delicate material handling.
5. **Specialized/Customized Grippers**
    - Designed for specific tasks (e.g., robotic surgery grippers, food industry grippers).

(B) **Tool End Effectors (Process-oriented tools)**

- **Welding Torch** – for robotic arc or spot welding.
- **Spray Gun** – for painting or coating.
- **Screwdriver / Drilling Tool** – for automated assembly.
- **Cutting, grinding, or laser tools** – for manufacturing.
- **3D Printing Nozzle** – in additive manufacturing robots.

3. Design Considerations for End Effectors

- **Payload capacity** (weight of the object/tool).
- **Shape and size** of objects to be handled.
- **Material properties** (rigid, fragile, magnetic, smooth, etc.).
- **Accuracy and repeatability** requirements.
- **Environment conditions** (temperature, dust, underwater, etc.).
- **Safety** (especially in human–robot collaboration).

4. Actuation Methods

- **Pneumatic actuators** → fast, simple, for on/off gripping.
- **Hydraulic actuators** → for heavy-duty gripping (large forces).
- **Electric motors/servos** → for precise and controllable gripping.
- **Smart materials (Shape Memory Alloys, Electro-adhesion)** → used in modern lightweight designs.

5. Sensing in End Effectors

- **Force/Torque sensors** → to measure grasping force.
- **Proximity sensors** → to detect object position.
- **Tactile sensors** → to mimic human touch for delicate handling.
- **Vision systems** → for adaptive gripping and alignment.

6. Applications of End Effectors

- **Manufacturing automation** → welding, painting, assembly.
- **Material handling** → pick-and-place, packaging, palletizing.
- **Medical robotics** → surgical tools, prosthetic hands.
- **Service robots** → vacuum cleaning brushes, delivery grippers.

7. **Explain about the mechanical grippers and types of mechanical grippers in detail.**

Mechanical Finger Grippers

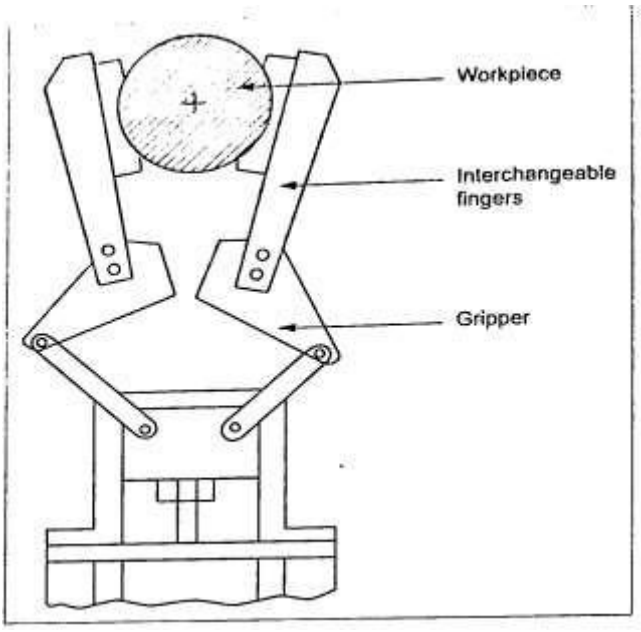

- A mechanical gripper is an end effector that uses mechanical finger actuated by mechanism to grasp an object.
- Mechanical grippers are used to transfer parts from one location to another or to assemble parts.

Mechanical Grippers with Two Fingers

Dual Gripper

- The robot picks up the next work part. While the machine is still processing the preceding part.
- When the machine finishes, the robot reaches into the machine once to remove the finished part and load the next part. This reduces the cycle time per part.

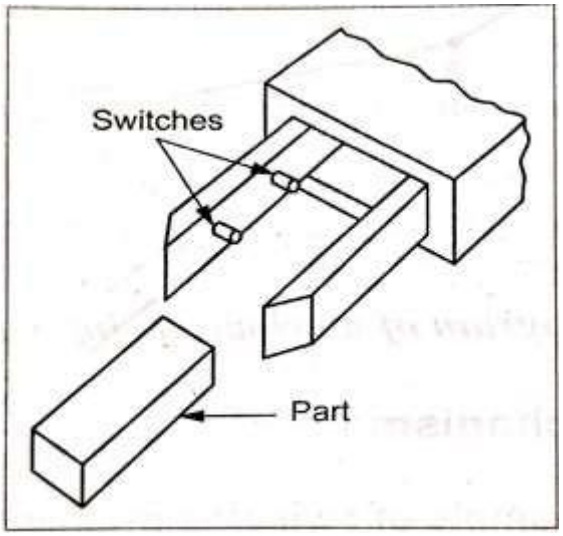

Pivoting

- This is the most popular mechanical gripper for industrial robots. It can be designed for limited shapes of an object, especially cylindrical workplace.

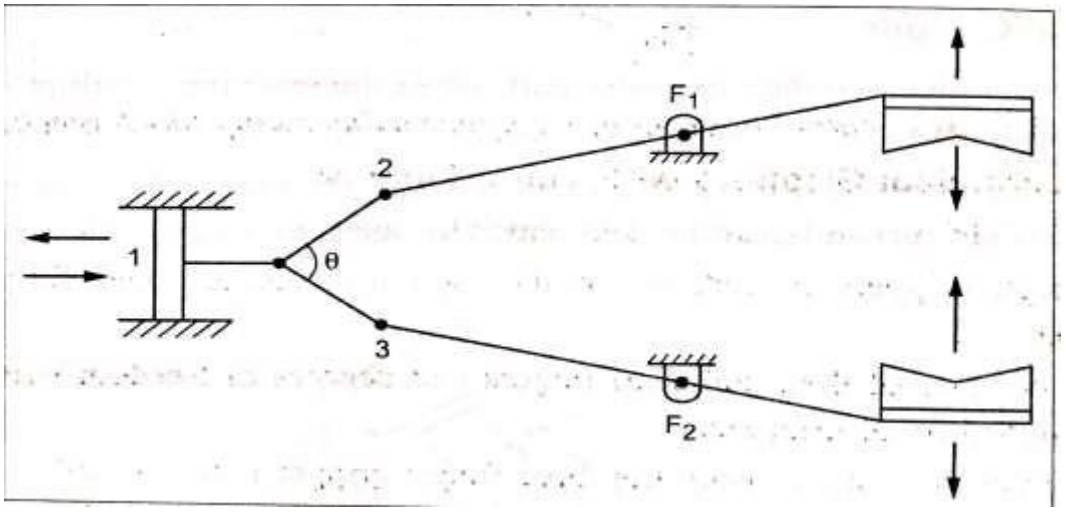

Swinging Gripper Mechanisms

- Swinging gripper that uses the piston-cylinder. This is the swing-block mechanism.

- The sliding rod 1, actuated by the pneumatic piston transmits motion by way of the two symmetrically arranged swing-block linkages.

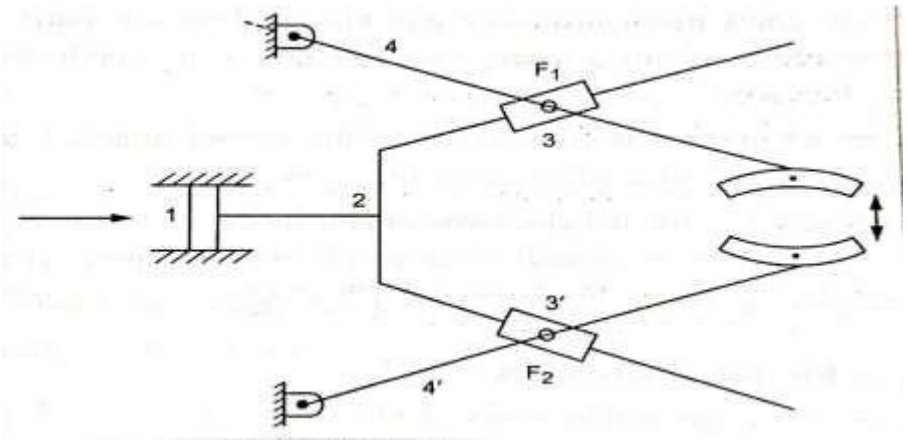

Mechanical Grippers with Three Fingers

- Gripper using three point chuck mechanism.
- 3-Finger grippers consists of simulate action of thumb, index finger and third finger using ball-screw mechanism.
- The main reason for using the three-finger gripper is its capability of grasping the object in three spots, enabling both a tighter grip and the holding of spherical objects of different size keeping the center of the object at a specified position.

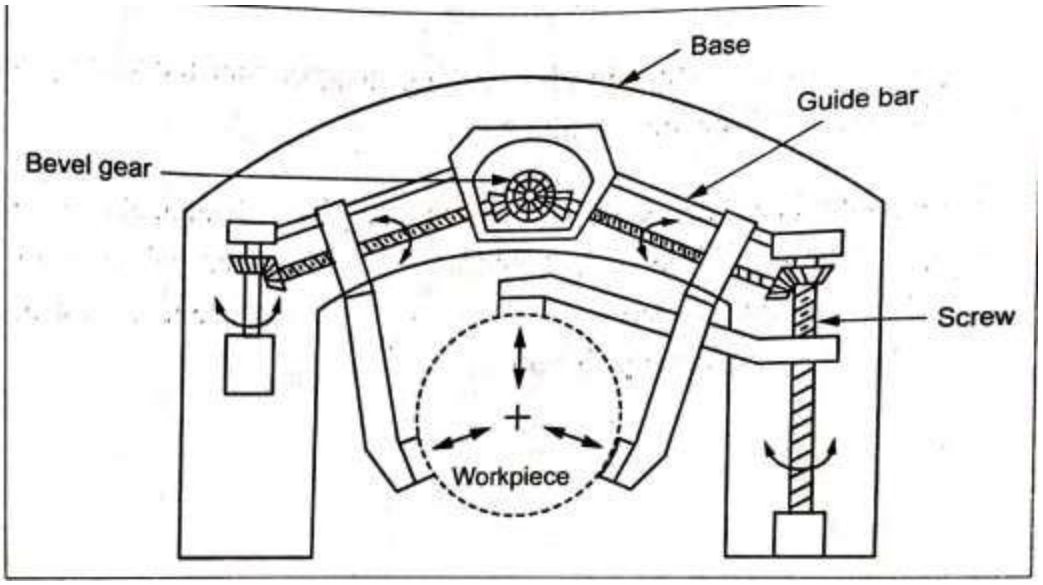

- Electric motor output is transmitted to the screws attached to each finger through bevel gear trains which rotate the screws.

Multiple Fingered Grippers

- That possesses the general anatomy of a human hand.
- Enables effective simultaneous executions of more than two different jobs.
- A multiple-gripper system is one that has a single robot arm but two or more grippers or end-of-arm tools which can be used interchangeably on the manufacturing process in the cell.

Advantage of mechanical grippers

- Reliability
- Ease of control
- The ability to handle a wide range of object types and sizes.

Disadvantage of mechanical grippers

- They can be less precise with delicate objects, and their design can be complex, especially for larger work pieces.

Applications of mechanical grippers

- Manufacturing, logistics, food handling, and even healthcare.
- Not ideal for soft or fragile objects.
- Dependency on external power.
- Maintenance needs.
- Potential for damage.

8. Explain about the vacuum gripper in detail.

The vacuum gripper has two components:

(a) The vacuum gripper cups

(b) The vacuum system

- The vacuum cups consist of a flexible-rubber cup and a hard-rubber cup.
- Cups are made of elastic material and round in shape.
- The cup creates negative pressure, which in turn, create the vacuum and the necessary lifting power.
- The vacuum is created between cup and the object.

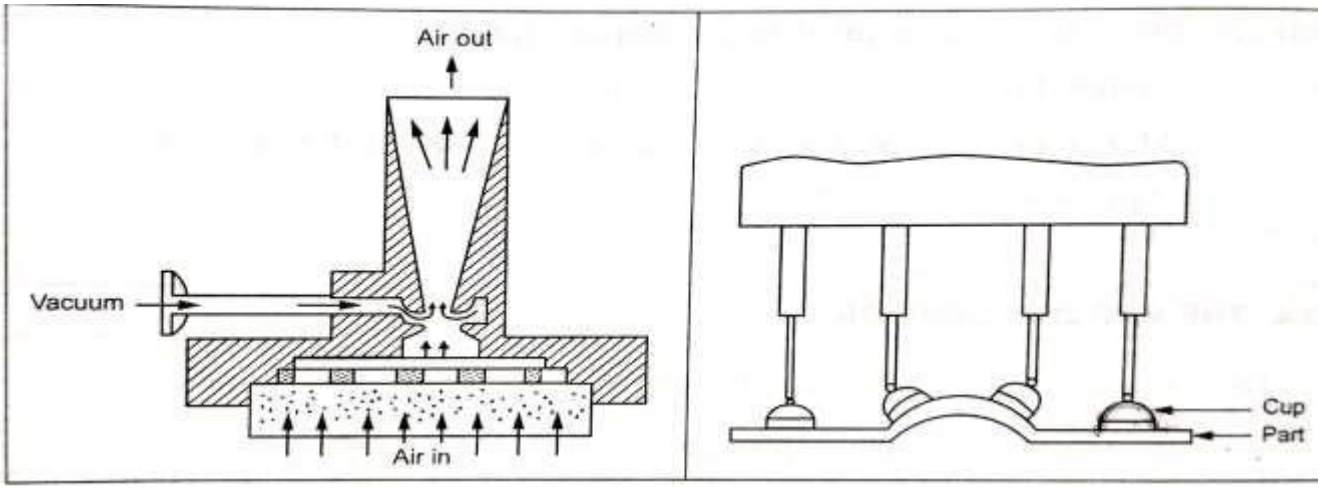

- Number of grippers (cups) determines the size and weight of object to be grasped.
- Vacuum gripper is used for handling of fragile parts.
- Positioning of parts not as critical as with other grippers.

- In some applications where the objects are too thin to be handled, they can be held by vacuum grippers.
- The lifting capacity of suction pump depends upon the effective area of the cup and negative air pressure (vacuum) between the cup and the object.

Uses of Vacuum Grippers

- It is used for picking of metal parts and large light weight boxes.

Advantages

- The Gripper is lighter in weight.
- Distribute the pressure entirely in some area.

Disadvantages

- It is not suitable for components having curved surface and holes.
- More time is required to build the vacuum in the cup.

Applications

- Pick-and-Place Operations
- Material Handling
- Packaging and Assembly
- Handling Delicate Objects

9. Explain about the Magnetic grippers in detail.

Grippers in which a magnetic substance performs the grasping action for ha ferrous material are called magnetic grippers.

The types of magnetic grippers are:

(i) Permanent magnet grippers

(ii) Electromagnetic grippers

Permanent Magnet Grippers

- The magnetic gripper employs the effect of a magnetic field coming into contact with a ferrous metal.
- The magnetic field is developed by passing constant current through an electromagnet.
- This field causes the molecules of the ferrous metal to align and develop smaller magnetic fields in the part.

- The electric current is turned off after the part has been lifted and placed at the desired place.

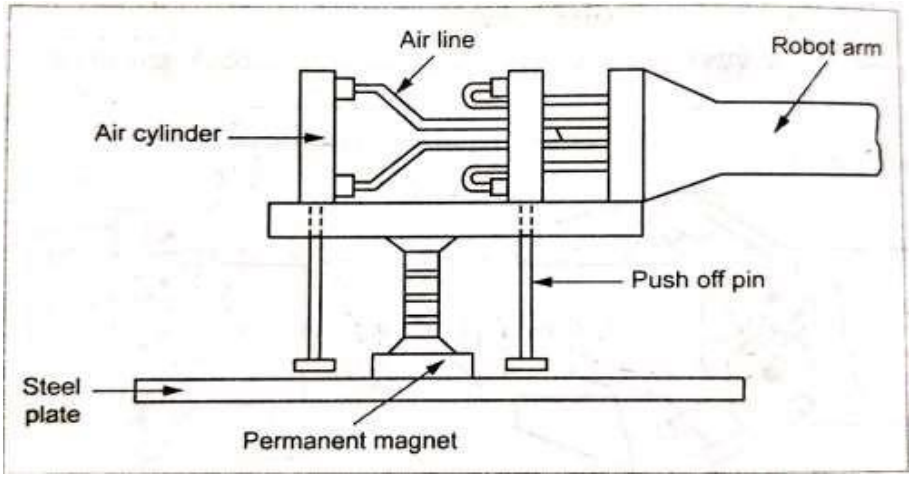

Advantage:

- Variety of part size can be handled.
- Pickup times are very fast.
- Variations in part size can be tolerated.
- A magnetic gripper, despite in compact size, can sustain enormous holding power.

Disadvantage:

- Residual magnetism remaining in the work piece may cause problems.
- Side slippage.
- More than one sheet will be lifted by the magnet from a stack.
- Lack of control during some duration of the cycle.

Applications:

- Material Handling: Moving ferrous metal parts in manufacturing and assembly lines, such as in the automotive, aerospace, and electronics industries.
- Assembly Processes: Integrating components into larger products on assembly lines.
- Robotics: As end effectors for robotic arms in various automated tasks.

Electromagnetic Grippers

- Electromagnetic grippers can be employed for holding magnetic materials Fig.
- When the objects to be handled are too large and ferromagnetic in nature pneumatic grippers may be employed.
- This is more suitable for flat materials and holding force in such case will be high.

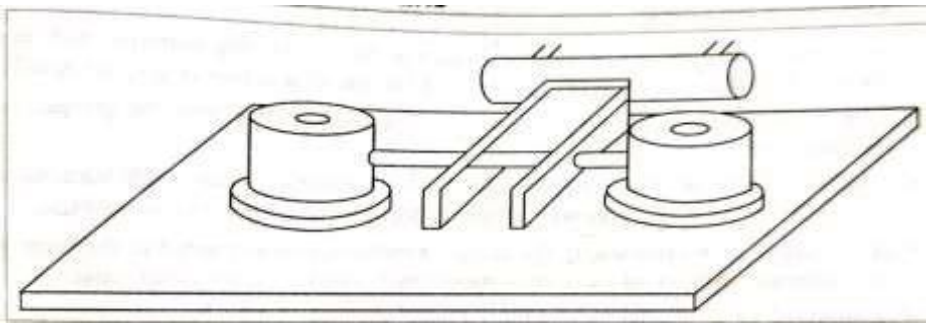

Advantage

- Electromagnet grippers are easier to control, but they require a source of electric power.
- Fast grasping speed
- Strong and adjustable grip
- Minimal maintenance

Disadvantages:

- Limited to ferromagnetic materials
- Sensitivity to surface contaminants
- Can be affected by strong magnetic fields.

Applications:

- Metal fabrication: Handling steel sheets, metal parts, and other ferromagnetic components in manufacturing processes.
- Recycling: Sorting and handling metal scrap in recycling plants.
- Assembly: Assembling metal components in automated production lines.
- Robotics: Integral part of robotic systems for various handling tasks.

10. Explain about the Adhesive gripper and Pneumatic gripper in detail.

Adhesive Gripper

- In a device an adhesive substance is used to hold a flexible material such as a fabric. An adhesive substance can be used for grasping action in gripper design.
- The requirement on the items to be handled are that they must be gripped on one side only.
- Employed to handle fabric and light weight material.

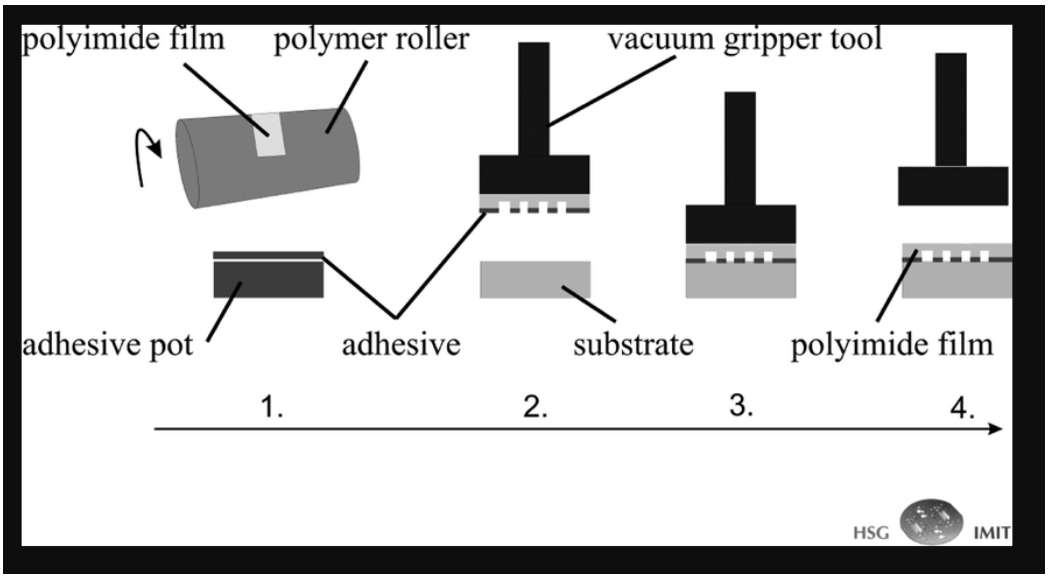

Advantages:

- High Force-to-Volume Ratio
- Versatile Gripping
- Reduced Damage
- Adaptability

Limitations of adhesive grippers:

- Adhesive substances losses his tackiness on repeated usage.
- Reliability is diminished with successive operations.

Applications:

- Industrial Automation
- Medical Robotics
- Textile Industry
- Space Exploration.

Pneumatic Gripper

- In a pneumatic gripper, power of a piston cylinder system can be translated into a gripping force.
- Pneumatic provides a high amount of gripping force in a small and light package.
- Pneumatic grippers can be employed for handling flat faced objects like plates by creating vacuum in a cup shaped and effector.

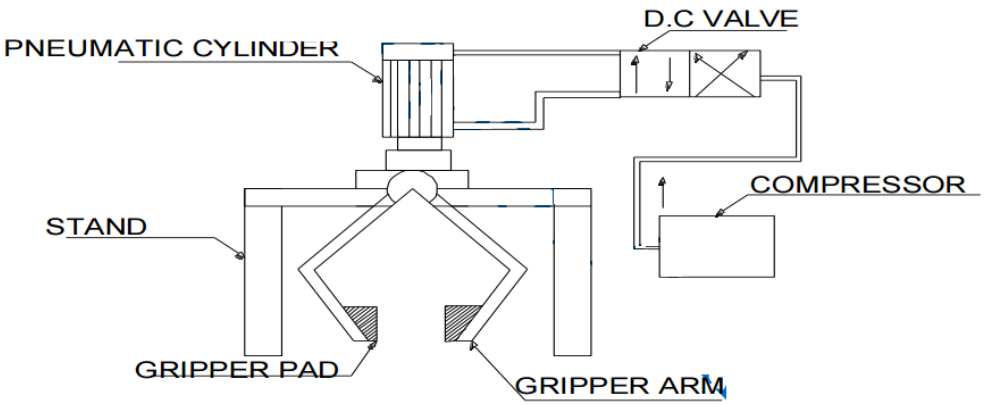

Gripping force = (pa **– p) A**

Where,

pa = Atmospheric pressure

P = Vacuum pressure (absolute), A = Area of cup producing vacuum

Advantages:

- Compact size.
- It is cheapest form of all grippers.
- Its light weight design.
- Pick up time is very fast.

Disadvantages:

- It has a slightly lower power to weight ratio than hydraulics.
- It is not as controllable or easy to feed as electricity. In most situations however these are not important.
- Some time is required to build the pressure.

Applications:

- Food Processing: Handling delicate food items with specialized soft grippers.
- Electronics Assembly: Precise and delicate handling of electronic components.
- Medical Device Manufacturing: Handling sensitive medical equipment and components.
- Automotive Manufacturing: Assembling parts and components with precision.

11. **Explain about the gripper force analysis in detail.**

- The purpose of the gripper mechanism is to convert input power into the required motion and force to grasp and hold an object.
- Let us illustrate the analysis that might be used to determine the magnitude of the required input power in order to obtain a given gripping force.
- We will assume that a friction-type grasping action is being used to hold the part, and

we will therefore use the gripper force calculated.

- Gripper force analysis involves understanding and calculating the forces needed for a gripper to securely grasp and hold an object. This analysis is crucial for designing grippers that can handle various objects, materials, and forces encountered in robotic and industrial applications.

Key aspects of gripper force analysis:

Grip Force Calculation:

Determining the forces required to maintain a stable grip on an object, considering factors like object weight, shape, and material properties.

Force Distribution:

Analyzing how forces are distributed across the gripper's fingers or contact points during grasping.

Force Closure:

Ensuring that the gripper can exert forces that prevent the object from escaping, often involving static and dynamic force analysis.

Mechanism Design:

Using force analysis to optimize the gripper's mechanical design for efficient and reliable grasping.

Methods and tools used in gripper force analysis:

Mathematical Modeling:

Using equations and formulas to represent the forces and torques involved in grasping.

Finite Element Analysis (FEA):

Simulating the stress and strain distribution within the gripper and object during grasping.

Experimental Testing:

Conducting physical experiments with grippers to measure forces and validate analytical models.

Software Simulations:

Utilizing software like SolidWorks or other simulation tools to model and analyze gripper performance.

Applications of gripper force analysis:

Robotics:

Designing grippers for robots used in manufacturing, logistics, and other industries.

Industrial Automation:

Optimizing gripping mechanisms for automated processes in factories and production lines.

Medical Devices:

Developing grippers for surgical tools and prosthetics.

Research and Development:

Investigating new gripper designs and grasping techniques for various applications.

UNIT - IV

MOBILE ROBOTS

PART –A

1. What is Mobile robot?

Mobile robots are automated machines capable of movement and performing tasks in physical environments without direct human control.

2. List out the components of mobile robot.

- ✓ Power Supply.
- ✓ Control System.
- ✓ Sensors.
- ✓ Processing Unit.
- ✓ Actuators / Motors.
- ✓ Movement & Navigation.
- ✓ Feedback Loop

3. What is wheeled mobile robot?

A wheeled mobile robot (WMR) is a type of robot that uses wheels to move around, typically on flat or relatively smooth surfaces.

4. What is omnidirectional and non-holonomic wheeled mobile robots? Omnidirectional wheeled mobile robots

- ✓ An -omnidirectional robot can move in any direction within its plane (2D or 3D) without needing to reorient itself.
- ✓ **Example:** A robot with Mecanum wheels can move forward, backward, and sideways, and also rotate simultaneously.

Non-holonomic wheeled mobile robot

- ✓ A non-holonomic robot has constraints on its movement, meaning it cannot move in all directions at any given orientation.
- ✓ **Example:** A differential drive robot (two independently driven wheels) or a car-like robot is a non- holonomic robot.

5. What is motion planning?

Motion planning is the process of determining a sequence of valid movements for a robot or other object to travel from a starting point to a goal, while avoiding obstacles and satisfying constraints.

6. What is odometry in wheeled mobile robot?

Odometry in wheeled mobile robots is a technique used to estimate the robot's position and orientation (pose) based on the motion of its wheels.

7. What are manipulators in robotics?

In robotics, a manipulator is a mechanical device, typically resembling an arm, which is designed to interact with its environment by manipulating objects or tools.

8. **List out the components of a mobile manipulation system.**

- ✓ **Wheeled Base:** Differential drive, omnidirectional base
- ✓ **Manipulator :** 4- to 7-DOF robotic arm (e.g., UR5, Kinova)
- ✓ **End-Effector :** Gripper, suction, tool (welding, camera)
- ✓ **Sensors :** LiDAR, camera, IMU, force/torque sensors
- ✓ **Control System:** ROS-based system for planning and feedback

9. What is Mobile Manipulation?

- ✓ A mobile base (e.g., wheeled robot) for locomotion
- ✓ A robotic manipulator (arm) for interacting with the environment
- ✓ Sensors for perception and navigation
- ✓ Controllers for coordinated motion planning and execution
- ✓ Example: A robot that navigates a warehouse, picks items from shelves, and places them into bins.

PART – B

1. Explain about the working of mobile robot, types and list out the advantage, disadvantage and applications in detail.

A **mobile robot** is a type of robot that can move autonomously (or semi-autonomously) from one place to another within its environment.

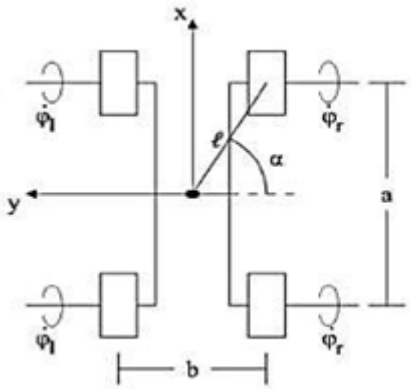

The working involves several key stages:

a) Perception (Sensing the Environment)

- ✓ Robots use sensors such as **LIDAR, ultrasonic, infrared, GPS, cameras, and IMUs** to perceive the surroundings.
- ✓ Data collected helps the robot build a map and detect obstacles.

b) Localization (Knowing its Position)

- ✓ The robot estimates its position relative to the environment using methods like **odometry, SLAM (Simultaneous Localization and Mapping), GPS-based navigation**.

c) Path Planning and Navigation

- ✓ Based on the goal location, the robot plans an optimal and safe path.
- ✓ Algorithms like *A, D*, Dijkstra, and probabilistic roadmaps are often used.

d) Motion Control (Executing the Path)

- ✓ The robot's actuators (motors, wheels, tracks, or legs) execute commands from the controller.
- ✓ Motion controllers ensure smooth, stable, and accurate movement.

e) Decision Making (Autonomy Level)

- ✓ AI techniques (e.g., reinforcement learning, neural networks) may allow higher-level autonomy where the robot adapts to changes.

Types of Mobile Robots

Mobile robots can be classified based on **locomotion mechanism** and **degree of autonomy**.

A) Based on Locomotion

1. **Wheeled Robots**
   - ✓ Use wheels for locomotion.
   - ✓ Common in warehouses, delivery robots.
   - ✓ Examples: AGVs (Automated Guided Vehicles), autonomous cars.
2. **Legged Robots**
   - ✓ Use legs for mobility, inspired by animals/humans.
   - ✓ Better for rough terrain.
   - ✓ Examples: Boston Dynamics' *Spot*, humanoid robots like *Atlas*.
3. **Tracked Robots**
   - ✓ Use caterpillar tracks (like tanks).

- ✓ Suitable for uneven terrain and military applications.

4. **Aerial Robots (Drones / UAVs)**
   - ✓ Use propellers or wings for flight.
   - ✓ Applications: surveillance, delivery, agriculture.
5. **Underwater Robots (AUVs/ROVs)**
   - ✓ Operate underwater for exploration, research, or military.

B) Based on Autonomy

1. **Teleoperated Robots** – controlled remotely by humans (e.g., bomb disposal robots).
2. **Autonomous Robots** – make decisions on their own using AI and sensors (e.g., self-driving cars).
3. **Semi-autonomous Robots** – combination of human supervision and autonomous functions (e.g., warehouse robots guided but capable of avoiding obstacles).

Advantages of Mobile Robots

- ✓ **Flexibility**: Can work in different environments unlike fixed robots.
- ✓ **Accessibility**: Reach remote, hazardous, or confined areas (space, deep sea, disaster zones).
- ✓ **Efficiency**: Increase productivity in warehouses, factories, and delivery services.
- ✓ **Safety**: Perform dangerous tasks (mine detection, bomb disposal, nuclear inspection).
- ✓ **Adaptability**: Can handle dynamic, unstructured environments.

Disadvantages of Mobile Robots

- ✓ **High Cost**: Advanced sensors, AI systems, and batteries make them expensive.
- ✓ **Complexity**: Require sophisticated control, path planning, and localization algorithms.
- ✓ **Maintenance**: Regular calibration and servicing needed.
- ✓ **Limited Power Supply**: Battery constraints reduce operation time.
- ✓ **Safety Concerns**: Malfunctions in autonomous navigation could cause accidents.
- ✓ **Environmental Limitations**: Performance depends on terrain, weather, and sensor reliability.

Applications of Mobile Robots

1. **Industrial & Warehousing**
   - Automated Guided Vehicles (AGVs) for material handling.
   - Autonomous Mobile Robots (AMRs) in Amazon warehouses.
2. **Healthcare**
   - Hospital delivery robots for medicine, food, and equipment.
   - Disinfection robots (UV light-based).
3. **Military & Defense**
   - Bomb disposal, surveillance, and reconnaissance.
   - Autonomous drones and combat support.
4. **Exploration**
   - Space rovers (NASA's *Perseverance*, *Curiosity*).
   - Underwater AUVs for oceanographic research.
5. **Agriculture**
   - Drones for crop monitoring and spraying.
   - Autonomous tractors for plowing and harvesting.
6. **Transportation**
   - Self-driving cars, delivery robots, and logistics support.
7. **Domestic Service**
   - Cleaning robots (Roomba), lawn mowing robots.
8. **Disaster Response**
   - Search and rescue in collapsed buildings, mines, or fire zones.

2. Explain about the working of wheeled mobile robot and list out the advantage, disadvantage and applications in detail.

Wheeled Mobile Robots (WMRs)

It is a autonomous robots that use wheels for ground-based locomotion, moving on a rigid chassis equipped with one or more wheels.

1. Working Principle

A **Wheeled Mobile Robot** is a type of mobile robot that uses wheels as its locomotion mechanism. The working of a WMR is based on four core stages:

1. **Perception (Sensing):**
   - Sensors such as LIDAR, cameras, GPS, ultrasonic, and IMU detect the environment, obstacles, and position.
   - This allows the robot to build a map or localize itself in an environment (SLAM – Simultaneous Localization and Mapping is often used).
2. **Decision (Planning):**
   - A controller (microcontroller, onboard computer, or ROS-based system) processes sensor data.
   - Algorithms plan paths, calculate wheel speeds, and decide how to avoid obstacles or follow a given trajectory.
3. **Action (Locomotion):**
   - The locomotion system converts commands into movement.
   - DC/servo motors drive wheels via differential drive, skid-steer, synchro drive, or omnidirectional wheel systems.
   - Kinematics equations ensure correct turning, forward, and backward motions.
4. **Feedback (Control Loop):**
   - Wheel encoders and sensors provide feedback about actual movement.
   - The control system (PID, Model Predictive Control, AI-based controllers) compares actual vs. desired motion and adjusts wheel speed.

☞ **In short:**

Sensors → Controller → Path Planning → Motor Actuation → Movement → Feedback Loop.

2. Types of Wheeled Mobile Robots

1. **Differential Drive Robots**
   - Two powered wheels (left and right) + caster wheels for balance.
   - Turning by varying wheel speeds (like a tank).
2. **Tricycle Drive Robots**
   - One steerable front wheel + two rear wheels.
   - Steering similar to bicycles/cars.
3. **Omnidirectional Robots**
   - Use special Mecanum or Omni-wheels.
   - Can move in any direction without rotating body.
4. **Ackermann Steering Robots**
   - Like cars—front wheels steer, rear wheels drive.
   - Useful for high-speed and large robots.

3. Advantages of Wheeled Mobile Robots

- ✓ **Simple mechanical design** – wheels are easier to manufacture and control compared to legs.
- ✓ **Energy efficient** – less power consumption compared to legged robots.

- ✓ **Fast and smooth motion** – suitable for structured indoor and outdoor surfaces.
- ✓ **High payload capacity** (especially for multi-wheel configurations).
- ✓ **Good control accuracy** – wheel encoders provide precise odometry.
- ✓ **Low maintenance** compared to complex locomotion systems like legs/tracks.

4. Disadvantages of Wheeled Mobile Robots

- ✓ **Limited terrain adaptability** – struggles on uneven, rocky, or soft terrain.
- ✓ **Obstacle negotiation is poor** – cannot climb stairs or large obstacles.
- ✓ **Slippage errors** – odometry becomes inaccurate on slippery or irregular surfaces.
- ✓ **Navigation complexity** – requires good maps and sensors for dynamic environments.
- ✓ **Limited maneuverability** – except omnidirectional wheels, normal wheels have turning constraints.

5. Applications of Wheeled Mobile Robots

Industrial & Logistics

- Automated Guided Vehicles (AGVs) in warehouses for goods transport.
- Autonomous Mobile Robots (AMRs) for sorting, stocking, and delivery.
- Factory floor material handling.

Healthcare

- Hospital delivery robots (medicines, meals, documents).
- Sanitation and disinfection robots.
- Telepresence robots for doctors/nurses.

Agriculture

- Autonomous tractors and sprayers.
- Crop inspection robots.

Military & Defense

- Surveillance and reconnaissance on relatively flat terrains.
- Bomb disposal robots.

Service & Domestic Use

- Cleaning robots (like vacuum robots).
- Security patrol robots in malls/offices.
- Delivery robots in campuses and cities.

Research & Education

- Used widely in labs for AI, navigation, and robotics experiments.

3. Explain about the Kinematic models of omnidirectional and non-holonomic wheeled mobile robots Controllability, motion planning and feedback control in detail.

Kinematic Models of Wheeled Mobile Robots

Kinematics describes how a mobile robot moves in space **without considering forces/torques** (that's dynamics). For wheeled mobile robots (WMRs), the kinematics depend on **wheel arrangements** and **constraints**.

Omnidirectional Robots (holonomic systems)

- Can move in any direction **independently of orientation**.
- Typically use special wheels like **Mecanum wheels** or **Omni-wheels**.
- **Degrees of freedom (DOF):** 3 (x, y, θ) are fully controllable.

Non-holonomic Robots

- Have **non-integrable constraints** (like rolling without slipping).
- Example: Differential drive robots, car-like robots (Ackermann steering).

- Cannot move sideways directly; they must reorient first.
- **DOF < Control Inputs**, which complicates planning.

Kinematic Models

A. Omnidirectional WMR (Holonomic)

- State: $[x, y, \theta]$ – position and orientation.
- Velocity inputs: v_x, v_y, ω (linear velocity in x, y, and angular velocity).

$$\begin{bmatrix} \dot{x} \\ \dot{y} \\ \dot{\theta} \end{bmatrix} = \begin{bmatrix} v_x \cos\theta - v_y \sin\theta \\ v_x \sin\theta + v_y \cos\theta \\ \omega \end{bmatrix}$$

- With Mecanum or omni-wheels, the robot can **directly control** v_x, v_y, ω.
- Hence, the system is **holonomic** and can follow arbitrary trajectories.

B. Non-Holonomic WMR (Differential Drive / Car-like)

(i) Differential Drive Robot

- Two wheels with radius r, distance between wheels L.
- Inputs: Left wheel velocity ω_l, Right wheel velocity ω_r.
- Linear velocity:

$$v = \frac{r}{2}(\omega_r + \omega_l)$$

- Angular velocity:

$$\omega = \frac{r}{L}(\omega_r - \omega_l)$$

- Kinematics:

$$\dot{x} = v\cos\theta, \quad \dot{y} = v\sin\theta, \quad \dot{\theta} = \omega$$

(ii) Car-like Robot (Ackermann Steering)

- Input: Steering angle ϕ, forward velocity v.
- Kinematics:

$$\dot{x} = v\cos\theta, \quad \dot{y} = v\sin\theta, \quad \dot{\theta} = \frac{v}{L}\tan\phi$$

⚠ Note: Sideways velocity constraint → robot cannot move directly in y-direction.

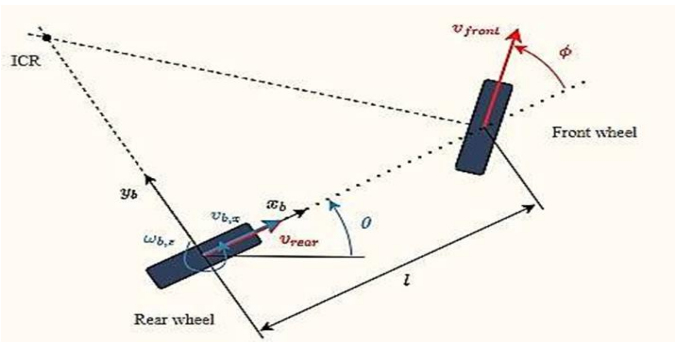

Controllability

- **Omnidirectional Robots:**
  - Fully controllable (holonomic).
  - Can reach any position and orientation in the plane directly.
- **Non-Holonomic Robots:**
  - Despite restrictions, they are **small-time locally controllable (STLC)**.
  - Means they can reach any configuration but not via arbitrary instantaneous motion.
  - Example: A car cannot move sideways, but by combining forward + steering.

Motion Planning

(i) Omnidirectional Robots

- Simple: Path planning can be done directly in (x,y,θ)(x,y,\theta)(x,y,θ) space.
- Algorithms: A*, RRT*, Potential Fields.
- Since no non-holonomic constraints, motion is smooth and flexible.

(ii) Non-Holonomic Robots

- More complex, since sideways motion is not possible.
- Need **non-holonomic motion planning algorithms**:
  - **Reeds-Shepp Curves** – for car-like robots (forward + reverse).
  - **Dubins Curves** – for forward-only motion (airplanes, cars without reverse).
  - **Lattice-based planning** – precomputed motion primitives for grid search.
  - **Sampling-based planning** – RRT, PRM adapted with non-holonomic constraints.

Feedback Control

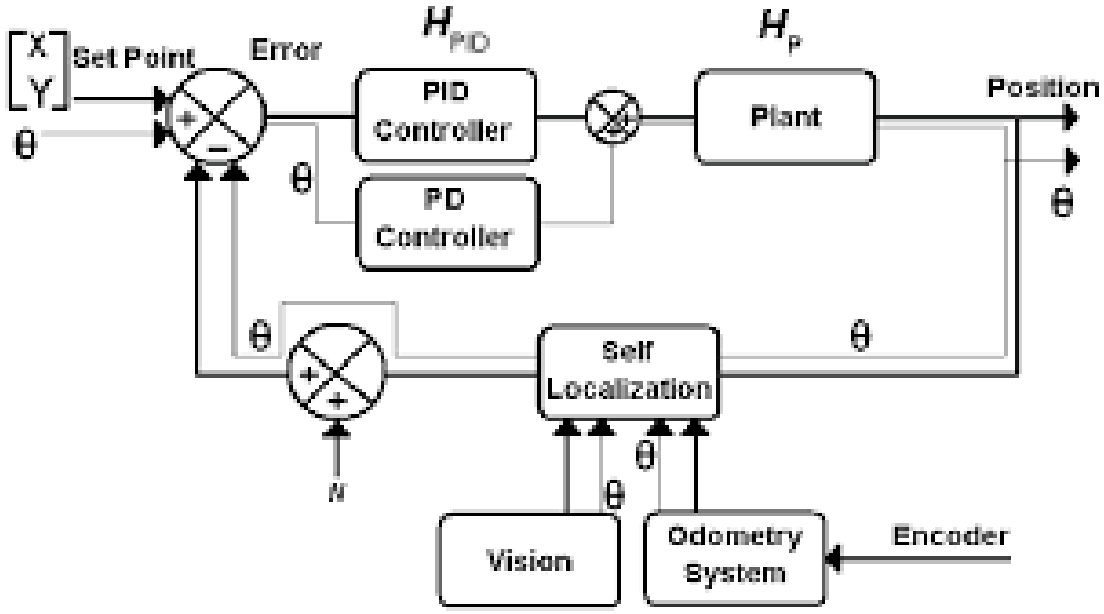

4. Explain about the Odometry for wheeled mobile robots in detail.

Odometry for wheeled mobile robots is a fundamental technique used to estimate the robot's position and orientation (its pose) by tracking the movement of its wheels.

Odometry Works

- ✓ The core principle of odometry is simple: if you know how far each wheel has rotated, and you know the robot's kinematic model (how wheel rotations translate into robot movement), you can estimate the robot's change in position and orientation. This process is typically performed iteratively at a high frequency.
- ✓ Odometry calculates the position of the robot by integrating the robot's velocity over time. For wheeled robots, this is commonly done using encoders attached to the wheels, which count the number of wheel rotations to determine the distance traveled.

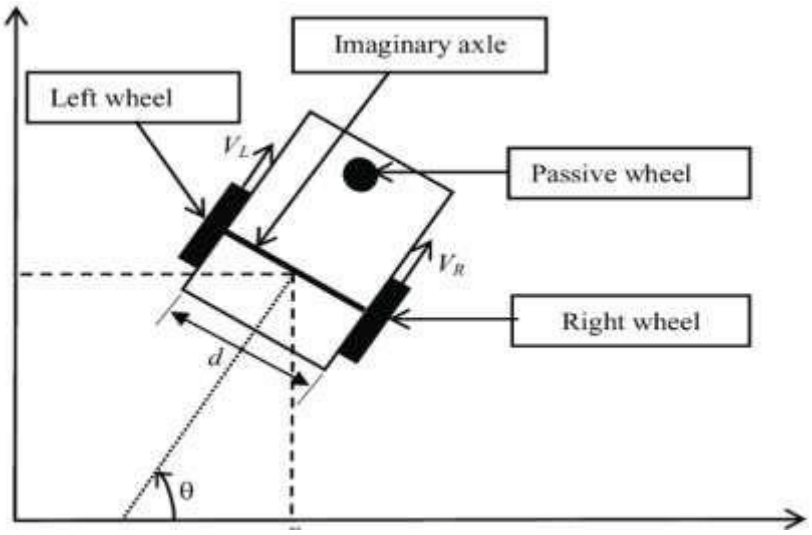

Key Concepts:

- ✓ **Wheel Encoders**: Sensors that measure how far a wheel has turned, providing distance information.
- ✓ **Velocity**: The speed at which the robot moves.
- ✓ **Heading**: The direction the robot is facing, often calculated using differential wheel speeds or an additional sensor like a gyroscope.
- ✓ The robot's position is computed by taking small time intervals, measuring the movement in each, and summing these changes to obtain the total displacement and orientation of the robot.
- ✓ **Wheel Rotation Measurement**
- ✓ **Calculate Individual Wheel Distances**
- ✓ **Calculate Robot's Linear and Angular Displacement (using Kinematic Model)**

Types of Odometry Sensors

While wheel encoders are the primary sensors for odometry, other sensors can also contribute to motion estimation:

Rotary Encoders (Wheel Encoders):

- ✓ **Optical Encoders:** Use a light source and a photo detector to read patterns on a rotating disc. Can be incremental or absolute. High resolution and non-contact.

- ✓ **Magnetic Encoders:** Use magnetic fields and Hall Effect sensors to detect rotation. Robust to dust and dirt.
- ✓ **Hall Effect Encoders:** A type of magnetic encoder that detects changes in a magnetic field.

Inertial Measurement Units (IMUs):

- ✓ **Accelerometers:** Measure linear acceleration, which can be integrated to estimate velocity and position (though prone to drift).
- ✓ **Gyroscopes:** Measure angular velocity, which can be integrated to estimate orientation.

Optical Odometry Sensors:

- ✓ Similar to how an optical mouse works, these sensors (often small cameras or specialized optical flow sensors) look at the texture of the surface directly beneath the robot and measure movement by tracking visual features.
- ✓ Offer high precision, especially on varied surfaces, and are less susceptible to wheel slip compared to wheel encoders.

Visual Odometry (VO):

- ✓ Uses a camera (monocular, stereo, or omnidirectional) to track features in the environment. By analyzing how these features move across consecutive camera frames, the robot's motion (translation and rotation) can be estimated.
- ✓ More computationally intensive than wheel odometry but provides rich data and can correct for accumulated errors. Often combined with SLAM (Simultaneous Localization and Mapping).

Odometry Error Sources

1. **Systematic Errors:** Predictable and consistent errors due to imperfections in the robot's mechanical parameters. These can often be calibrated and compensated for.
   - ✓ **Unequal Wheel Diameters:** Even tiny differences in manufacturing or wear can cause the robot to deviate from a straight line.
   - ✓ **Uncertainty about the Effective Wheelbase:** The actual effective distance between the wheels can differ slightly from the nominal design value, affecting angular calculations. This is particularly true if the wheels have some compliance or if the contact point isn't precisely at the center.
   - ✓ **Wheel Misalignment:** Wheels not perfectly parallel or perpendicular to the robot's body.
2. **Non-Systematic Errors:** Unpredictable and random errors caused by environmental factors or transient robot behavior. These are harder to model and compensate for.
   - ✓ **Wheel Slippage/Skidding:** Occurs on slippery surfaces (wet floors, ice), during aggressive acceleration/deceleration, or sharp turns. The wheels rotate, but the robot doesn't move the expected distance. This is the most significant source of non-systematic error.
   - ✓ **Uneven Floors/Obstacles:** Bumps, cracks, or small obstacles can cause wheels to momentarily lift off the ground or experience uneven contact, leading to inaccurate encoder readings.
   - ✓ **External Forces:** Collisions or external pushes can cause the robot to move in ways not reflected by wheel rotations.
   - ✓ **Measurement Noise:** Random noise in encoder readings.

Advantages:

- ✓ Simplicity and Cost-Effectiveness: Relatively simple to implement and uses inexpensive sensors (encoders).
- ✓ High Update Rate: Provides frequent pose updates, allowing for real-time control.
- ✓ Local Accuracy: Provides good accuracy over short distances and short time intervals.
- ✓ No External Infrastructure: Does not require external beacons, maps, or GPS signals, making it suitable for unknown or indoor environments.

Disadvantages:

- ✓ Errors accumulate over time and distance, leading to an unbounded increase in position uncertainty.
- ✓ Highly affected by wheel slip, which causes significant inaccuracies.
- ✓ Sensitivity to Mechanical Imperfections
- ✓ No Absolute Position

Applications of Odometry

- ✓ **Autonomous Navigation**: Used to track the movement of mobile robots in environments without GPS.
- ✓ **Localization and Mapping**: Helps robots estimate their position on a map and contribute to SLAM (Simultaneous Localization and Mapping) processes.
- ✓ **Motion Planning**: Provides information about the robot's movement, enabling smooth and efficient path planning.

5. Explain about the wheeled mobile robot for Reference Trajectory generation and feed forward control in detail.

Mobile robots are expected to move from an initial state to a desired goal state while following a **reference trajectory**.

1. **Trajectory Generation → Designing a feasible path/trajectory.**
2. **Feed forward Control → Computing the required control inputs (wheel velocities, steering angles) to follow that trajectory.**

1. Reference Trajectory Generation

A trajectory is a time-parameterized description of the desired robot motion:

$$\mathbf{q}_d(t) = [x_d(t), y_d(t), \theta_d(t)]$$

where:

- $x_d(t), y_d(t)$ → desired position in plane
- $\theta_d(t)$ → desired orientation
- Additionally, velocity and acceleration profiles may also be specified.

A. Requirements for a Valid Trajectory

- ✓ **Must respect robot kinematic constraints:**
  - Differential drive robots cannot move sideways.
  - Car-like robots must respect steering limits.
- ✓ **Must satisfy smoothness (no discontinuities in position or velocity).**

- ✓ **Must be feasible in terms of velocity, acceleration, and curvature limits.**

B. Trajectory Generation Methods

1. **Geometric Path Planning → Time Parameterization**
   - **Plan geometric path first.**
   - **Then assign velocity/acceleration profiles (polynomial, trapezoidal).**
2. **Polynomial Trajectories**
   - **Use cubic or quantic polynomials for smooth motion.**
   - Example for x(t):

$$x(t) = a_0 + a_1 t + a_2 t^2 + a_3 t^3$$

   - Coefficients chosen to satisfy boundary conditions (start/end position, velocity).
3. Clothoid / Curvature Continuous Paths
   - Used for car-like robots → smooth steering.

Feed forward Control for WMRs

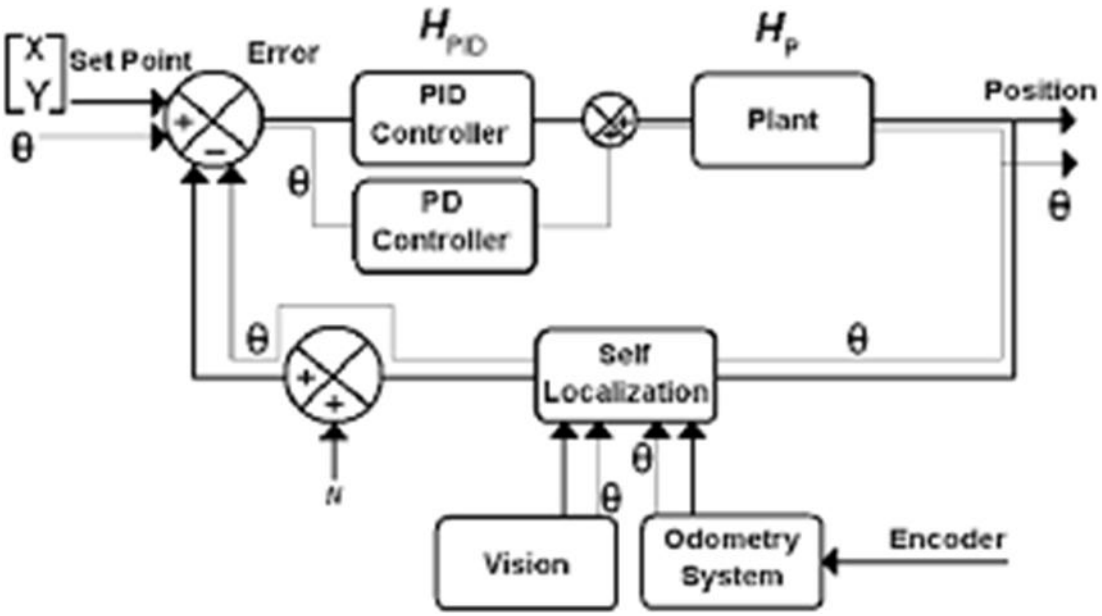

- ✓ **Feed forward control means computing the control inputs in advance (before executing) based on the desired trajectory and the mathematical model of the robot.**
  - **It does not correct errors by itself.**
  - **It assumes the robot model is perfect and there are no disturbances.**
  - **It is usually combined with feedback control for robustness.**

UNIT - V

APPLICATIONS OF ROBOTS

PART – A

1. **What is mean by industrial robot?**

   Industrial robots are automated, programmable machines specifically designed to perform tasks in manufacturing and industrial environments.

2. **List out the key characteristics of industrial robot.**

   Automated – Programmable – Multipurpose - Capable of movement on multiple axes - High precision and repeatability.

3. **List out the major global manufacturers of industrial robots.**

   FANUC (Japan), ABB (Switzerland), Yaskawa Electric Corporation (Japan)
   KUKA (Germany), Kawasaki Robotics (Japan), Mitsubishi Electric (Japan)

4. **What is mean by Service robot?**

   A service robot is a robot that performs useful tasks for humans or equipment, service robots operate in non-industrial environments such as homes, hospitals, airports, offices, and even outdoor public spaces.

5. **What is mean by domestic or household robot?**

   A **domestic or household robot** is a type of **service robot** specifically designed to assist humans with tasks at home or in private living environments. Their main purpose is to make daily life easier, more efficient, and sometimes more entertaining.

6. **What is mean by medical robot?**

   A **medical robot** is a type of service robot designed to assist healthcare professionals and patients in medical procedures, rehabilitation, therapy, hospital logistics, and caregiving.

7. **What is mean by military robot?**

   A **military robot** is a type of service robot designed for defense, security, and battlefield operations. These robots assist armed forces by performing tasks that are **dangerous, repetitive, or require high precision.**

8. **What is mean by agricultural robot?**

   An **agricultural robot (Agri-robot or Agribot)** is a type of service robot used in farming to perform tasks traditionally carried out by human labor. These robots use **AI, sensors, drones, and automation technologies** to improve **productivity, efficiency, precision, and sustainability** in agriculture.

9. **What is mean by space robot?**

   Space robots are robotic systems designed to operate in the challenging environment of outer space. They are used for **exploration, construction, maintenance, and research** in space missions where human presence is difficult, risky, or impossible.

10. **What is mean by Aerial robotics**?

    Aerial robots, also known as **Unmanned Aerial Vehicles (UAVs)** or simply **drones**, are **robotic systems capable of controlled flight in the air without an onboard human pilot**.

PART – B & C

1. Explain about the industrial robot in detail.

Introduction

- ✓ An **industrial robot** is a programmable, automatically controlled, and reprogrammable mechanical device used in manufacturing and industrial environments. It is capable of moving materials, tools, or specialized devices through programmed motions to perform a variety of tasks such as welding, painting, assembly, packaging, material handling, inspection, and product testing.
- ✓ These robots are widely used in **automotive, electronics, aerospace, pharmaceuticals, and heavy industries** to improve efficiency, precision, and safety.

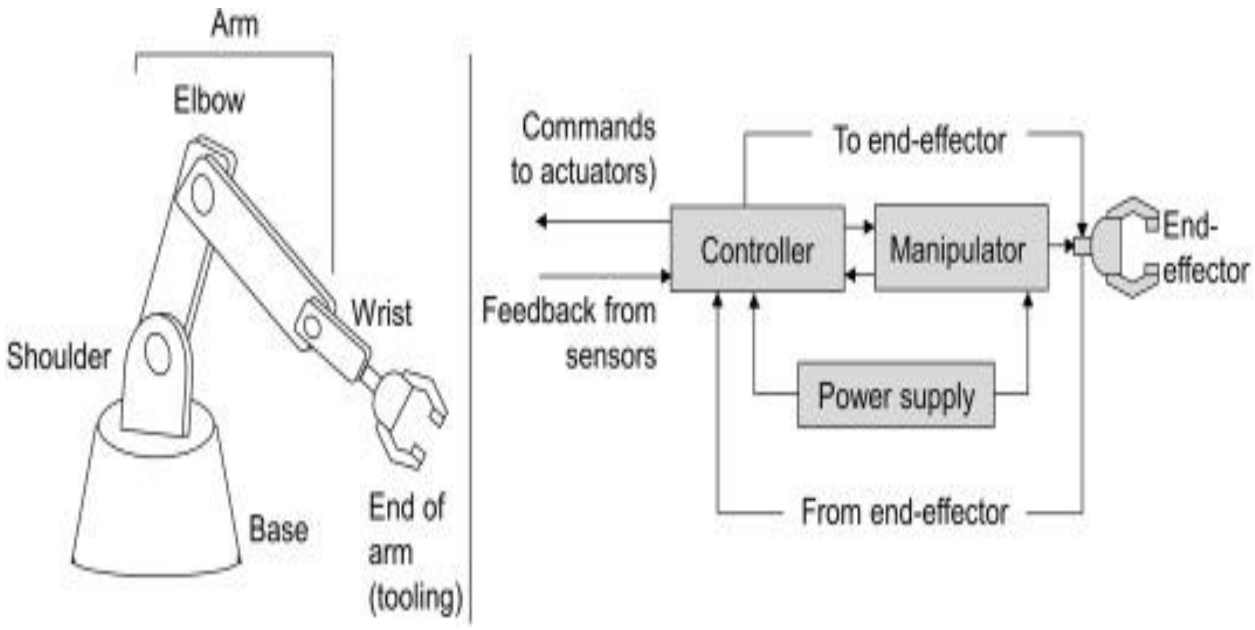

Major Components

Manipulator (Arm):

The mechanical structure with joints and links that provides movement.

Mimics the human arm with base, shoulder, elbow, and wrist joints.

End Effector (Tool):

Device attached at the end of the robot arm to interact with the environment.

Examples: grippers, welding torches, spray guns, suction cups.

Drive System:

Provides power for movement (electric motors, hydraulic actuators, pneumatic actuators).

Sensors:

Internal sensors: Monitor position, speed, and acceleration.

External sensors: Detect objects, vision systems, force/torque sensors.

Controller:

The "brain" of the robot.

Contains the microprocessor and software to interpret instructions and control motion.

Power Supply:

Provides required energy (electric, hydraulic, pneumatic).

Types of Industrial Robots (Based on Configuration)

1. **Cartesian Robots** (Linear robots)
   - Three linear movements (X, Y, Z axes).
   - Used in CNC machines, pick-and-place applications.

2. **SCARA Robots** (Selective Compliance Assembly Robot Arm)
    - Two parallel rotary joints for assembly operations.
    - Fast and precise – widely used in electronics.
3. **Articulated Robots** (Robotic arms)
    - Multiple rotary joints (commonly 6-axis).
    - Flexible and widely used in welding, painting, and assembly.
4. **Cylindrical Robots**
    - Rotary base with prismatic (linear) joints.
    - Suitable for assembly and material handling.
5. **Polar Robots** (Spherical robots)
    - Rotational base with extendable arm.
    - Used for die-casting, machine loading.

Characteristics of Industrial Robots

- **Degrees of Freedom (DOF):** Number of independent movements (typically 4–7).
- **Work Envelope:** Space within which the robot operates.
- **Payload Capacity:** Maximum weight the robot can handle.
- **Speed & Accuracy:** Fast movement with high repeatability (±0.02 mm in advanced robots).
- **Flexibility:** Can be reprogrammed for multiple tasks.

Advantages

- ✓ Increases productivity and efficiency.
- ✓ Provides consistent quality and precision.
- ✓ Reduces labor cost and production time.
- ✓ Handles hazardous tasks safely.
- ✓ Works continuously (24/7).

Disadvantages

- ✓ High initial investment cost.
- ✓ Requires skilled programmers and maintenance.
- ✓ Job displacement for unskilled labor.
- ✓ Limited flexibility compared to human dexterity in complex tasks.

Applications of Industrial Robots

- ✓ **Material Handling:** Loading/unloading, packaging, palletizing.
- ✓ **Welding:** Arc welding, spot welding.
- ✓ **Painting & Coating:** Automotive body painting.
- ✓ **Assembly:** Electronics, consumer products.
- ✓ **Machine Tending:** Feeding parts into CNC or presses.
- ✓ **Inspection & Quality Control:** Vision systems for defect detection.

Future Trends in Industrial Robotics

- ✓ **Collaborative Robots (Cobots):** Work safely with humans.
- ✓ **AI and Machine Learning Integration:** For intelligent decision-making.
- ✓ **IoT and Industry 4.0:** Connected robots in smart factories.
- ✓ **Mobile Robots + Manipulators:** Flexible production systems.
- ✓ **Sustainability:** Energy-efficient robots with recyclable components.

Leading Industrial Robot Manufacturers:

- ✓ FANUC (Japan)
- ✓ ABB (Switzerland)
- ✓ Yaskawa Electric Corporation (Japan)
- ✓ KUKA (Germany)
- ✓ Kawasaki Robotics (Japan) and Mitsubishi Electric (Japan).

2. Explain about the service robot in detail.

Introduction

A **service robot** is a robot that performs useful tasks for humans or equipment, service robots operate in **non-industrial environments** such as homes, hospitals, airports, offices, and even outdoor public spaces.

Major Components

Manipulator (Arm):

The mechanical structure with joints and links that provides movement.

Mimics the human arm with base, shoulder, elbow, and wrist joints.

End Effector (Tool):

Device attached at the end of the robot arm to interact with the environment.

Examples: grippers, welding torches, spray guns, suction cups.

Drive System:

Provides power for movement (electric motors, hydraulic actuators, pneumatic actuators).

Sensors:

Internal sensors: Monitor position, speed, and acceleration.

External sensors: Detect objects, vision systems, force/torque sensors.

Controller:

The "brain" of the robot.

Contains the microprocessor and software to interpret instructions and control motion.

Power Supply:

Provides required energy (electric, hydraulic, pneumatic).

Types of Service Robots

(A) Professional Service Robots

- ✓ **Medical robots:** Surgical robots, rehabilitation robots, hospital delivery robots.
- ✓ **Logistics robots:** Automated guided vehicles (AGVs), delivery robots in warehouses and hotels.
- ✓ **Defense & security robots:** Bomb disposal robots, surveillance drones, rescue robots.
- ✓ **Agricultural robots:** Crop monitoring, harvesting, spraying drones.
- ✓ **Construction robots:** Bricklaying, demolition, 3D printing of structures.

(B) Personal/ Domestic Service Robots

- ✓ **Household robots:** Vacuum cleaners (Roomba), window-cleaning robots, lawn-mowing robots.
- ✓ **Entertainment robots:** Robotic pets, companion robots.
- ✓ **Healthcare & assistance robots:** Elderly care robots, exoskeletons for mobility support.

Advantages

- ✓ Improves safety in hazardous tasks (e.g., bomb disposal, disaster rescue).
- ✓ Provides assistance to the elderly and disabled, improving quality of life.
- ✓ Enhances convenience in homes (cleaning, entertainment, security).
- ✓ Increases efficiency in logistics, healthcare, and agriculture.
- Works continuously without fatigue.

Disadvantages

- ✓ High development and maintenance costs.
- ✓ Reliability issues in unpredictable environments.
- ✓ Security and privacy risks (data collection, hacking).
- ✓ Limited decision-making ability compared to humans.
- ✓ Potential dependency on robots reducing human skills.

Applications of Service Robots

- ✓ **Healthcare:** Surgical robots (Da Vinci system), hospital delivery robots, rehabilitation exoskeletons.
- ✓ **Hospitality:** Hotel delivery robots, customer service humanoids (e.g., SoftBank's Pepper).
- ✓ **Logistics:** Delivery drones, warehouse robots (Amazon Kiva robots).
- ✓ **Agriculture:** Drones for crop spraying, robotic harvesters.
- ✓ **Defense & Security:** Surveillance robots, UAVs, bomb-disposal robots.
- ✓ **Domestic Use:** Robotic vacuum cleaners, lawn mowers, companion robots.
- ✓ **Education & Entertainment:** Interactive robots for teaching, games, and therapy.

3. Explain about the Domestic and household robot in detail.

Introduction

A **domestic or household robot** is a type of **service robot** specifically designed to assist humans with tasks at home or in private living environments. Their main purpose is to make daily life easier, more efficient, and sometimes more entertaining.

Major Components

Manipulator (Arm):

The mechanical structure with joints and links that provides movement.

Mimics the human arm with base, shoulder, elbow, and wrist joints.

End Effector (Tool):

Device attached at the end of the robot arm to interact with the environment.

Examples: grippers, welding torches, spray guns, suction cups.

Drive System:

Provides power for movement (electric motors, hydraulic actuators, pneumatic actuators).

Sensors:

Internal sensors: Monitor position, speed, and acceleration.

External sensors: Detect objects, vision systems, force/torque sensors.

Controller:

The "brain" of the robot.

Contains the microprocessor and software to interpret instructions and control motion.

Power Supply:

Provides required energy (electric, hydraulic, pneumatic).

Types of Domestic and Household Robots

(A) Cleaning Robots

- ✓ **Vacuum cleaners:** e.g., *iRobot Roomba, Ecovacs Deebot*
- ✓ **Window-cleaning robots**
- ✓ **Floor mopping robots**
- ✓ **Lawn mowing robots**

(B) Social and Companion Robots

- ✓ Provide entertainment, companionship, or elder care.
- ✓ Examples: *Sony Aibo (robot dog), Jibo, ElliQ*.

(C) Security and Surveillance Robots

- ✓ Patrol homes, detect intruders, and provide alerts.
- ✓ Equipped with cameras, sensors, and connectivity.

(D) Kitchen and Cooking Robots

- ✓ Robotic assistants for cooking or food preparation.
- ✓ Examples: robotic coffee makers, food-serving robots.

(E) Healthcare and Assistive Robots

- ✓ Help elderly or disabled people with mobility, medication reminders, and monitoring.
- ✓ Examples: robotic exoskeletons, elder-care robots.

(F) Educational and Entertainment Robots

- ✓ Robots used for learning (STEM kits, coding robots) and fun.
- ✓ Example: *LEGO Mindstorms, Anki Cozmo*.

Advantages

- ✓ Saves time and reduces household workload.
- ✓ Improves cleanliness and convenience.
- ✓ Provides companionship for elderly or lonely individuals.
- ✓ Enhances safety with monitoring and surveillance.
- ✓ Encourages education through interactive learning robots.

Disadvantages

- ✓ High cost of advanced models.
- ✓ Limited capability compared to human flexibility.
- ✓ Maintenance and battery replacement needed.
- ✓ Data privacy concerns (robots with cameras/microphones).
- ✓ Some tasks (like detailed cleaning or complex cooking) are still challenging.

Applications in Daily Life

- ✓ **Cleaning:** Robot vacuums, floor moppers, window cleaners.
- ✓ **Gardening:** Robotic lawn mowers and plant-care systems.
- ✓ **Security:** Home monitoring robots with cameras and alarms.
- ✓ **Elder Care:** Medication reminders, fall detection, companionship.
- ✓ **Cooking:** Automated coffee machines, robotic chefs.
- ✓ **Child & Pet Entertainment:** Interactive toys and robotic pets.

4. Explain about the Medical robots in detail.

Introduction

A **medical robot** is a type of service robot designed to assist healthcare professionals and patients in medical procedures, rehabilitation, therapy, hospital logistics, and caregiving.

Major Components

Manipulator (Arm):

The mechanical structure with joints and links that provides movement.

Mimics the human arm with base, shoulder, elbow, and wrist joints.

End Effector (Tool):

Device attached at the end of the robot arm to interact with the environment.

Examples: grippers, welding torches, spray guns, suction cups.

Drive System:

Provides power for movement (electric motors, hydraulic actuators, pneumatic actuators).

Sensors:

Internal sensors: Monitor position, speed, and acceleration.

External sensors: Detect objects, vision systems, force/torque sensors.

Controller:

The “brain” of the robot.

Contains the microprocessor and software to interpret instructions and control motion.

Power Supply:

Provides required energy (electric, hydraulic, pneumatic).

Types of Medical Robots

(A) Surgical Robots

Assist surgeons in performing minimally invasive surgeries with precision.

Examples: *MAKO Surgical Robot* (orthopedic surgery)

(B) Rehabilitation Robots

Help patients recover from injuries, strokes, or disabilities.

Examples: *Ekso Bionics Exoskeleton, ReWalk Robotics.*

(C) Assistive & Care Robots

Provide assistance to elderly, disabled, or bedridden patients.

Examples: *Robear (Japan) for patient lifting, Pepper robot in hospitals.*

(D) Telepresence Robots

Enable remote consultation by doctors.

Allow medical professionals to interact with patients virtually.

Example: *InTouch Health's telepresence robots.*

(E) Hospital Service Robots (Logistics & Delivery)

Transport medications, supplies, meals, or waste inside hospitals.

Reduce staff workload and infection risk.

Examples: *TUG robots, Moxi robot.*

(F) Diagnostic & Imaging Robots

Used in radiology, pathology, and lab automation.

Assist in scanning, biopsy, and lab testing.

Advantages

- ✓ Improved surgical accuracy and reduced human error.
- ✓ Minimally invasive surgeries → faster recovery, less pain.
- ✓ Frees up healthcare workers for critical tasks.
- ✓ Provides mobility and independence for patients.
- ✓ Enables remote healthcare access.

Disadvantages

- ✓ Very high initial cost (e.g., surgical robots can cost millions).
- ✓ Requires skilled training for operators.
- ✓ Risk of technical malfunction during critical procedures.
- ✓ Ethical and legal concerns (who is responsible for errors?).
- ✓ Limited adaptability in unpredictable medical situations.

Applications of Medical Robots

- ✓ **Surgery:** Cardiac, orthopedic, neurosurgery, urology.
- ✓ **Rehabilitation:** Stroke recovery, physiotherapy, mobility assistance.
- ✓ **Elderly Care:** Patient lifting, medication reminders, social interaction.
- ✓ **Telemedicine:** Remote diagnosis and treatment in rural/isolated areas.
- ✓ **Hospital Management:** Automated transport of supplies and disinfection robots.
- ✓ **Diagnostics:** Robotic lab assistants, AI-based diagnostic imaging.

5. Explain about the military robots in detail.

Introduction

A **military robot** is a type of service robot designed for defense, security, and battlefield operations. These robots assist armed forces by performing tasks that are **dangerous, repetitive, or require high precision**.

Major Components

Manipulator (Arm):

The mechanical structure with joints and links that provides movement.

Mimics the human arm with base, shoulder, elbow, and wrist joints.

End Effector (Tool):

Device attached at the end of the robot arm to interact with the environment.

Examples: grippers, welding torches, spray guns, suction cups.

Drive System:

Provides power for movement (electric motors, hydraulic actuators, pneumatic actuators).

Sensors:

Internal sensors: Monitor position, speed, and acceleration.

External sensors: Detect objects, vision systems, force/torque sensors.

Controller:

The "brain" of the robot.

Contains the microprocessor and software to interpret instructions and control motion.

Power Supply:

Provides required energy (electric, hydraulic, pneumatic).

Types of Military Robots

(A) Unmanned Aerial Vehicles (UAVs – Drones)

- Used for surveillance, reconnaissance, and targeted strikes.
- Examples: *MQ-9 Reaper, Bayraktar TB2.*

(B) Unmanned Ground Vehicles (UGVs)

- Perform tasks like bomb disposal, logistics, or combat support.
- Examples: *iRobot PackBot, TALON robot.*

(C) **Unmanned Underwater Vehicles (UUVs) / Naval Robots**

- Used for mine detection, underwater surveillance, and submarine assistance.
- Examples: *REMUS UUVs.*

(D) Autonomous Combat Robots

- Designed to directly engage in battle using weapons (controversial due to ethics).
- Example: *South Korea's SGR-A1 sentry gun robot.*

(E) Reconnaissance & Surveillance Robots

- Small robotic scouts for gathering intelligence in hazardous zones.

(F) Logistic & Support Robots

- Transport supplies, ammunition, or medical equipment in war zones.
- Example: *Boston Dynamics' LS3 (Legged Squad Support System).*

(G) Search and Rescue Robots

- Deployed after attacks or disasters to locate and save trapped soldiers/civilians.

Advantages

✓ Protects soldiers by handling high-risk missions.
✓ Provides continuous surveillance and intelligence.
✓ Reduces human casualties in combat zones.
✓ Enhances precision in strikes (reducing collateral damage).
✓ Assists in logistics and rescue during combat.

Disadvantages

✓ Very expensive to develop and maintain.
✓ Risk of malfunction or hacking in critical missions.
✓ Ethical issues regarding autonomous lethal robots.
✓ Limited adaptability compared to human soldiers in complex scenarios.
✓ Dependence on communication networks (vulnerable in warfare).

Applications of Military Robots

✓ **Surveillance & Reconnaissance:** UAVs and UGVs scouting enemy areas.
✓ **Combat Support:** Targeted strikes, automated sentry guns.
✓ **Bomb Disposal (EOD):** Robots defusing landmines and IEDs.
✓ **Logistics:** Transporting supplies and ammunition.
✓ **Search & Rescue:** Helping soldiers and civilians in post-battle zones.
✓ **Maritime Defense:** Detecting and neutralizing underwater mines.
✓ **Medical Evacuation:** Robots carrying wounded soldiers from battlefields.

6. Explain about the agricultural robots in detail.

Introduction

An **agricultural robot (Agri-robot or Agribot)** is a type of service robot used in farming to perform tasks traditionally carried out by human labor.

Major Components

Manipulator (Arm):

The mechanical structure with joints and links that provides movement.

Mimics the human arm with base, shoulder, elbow, and wrist joints.

End Effector (Tool):

Device attached at the end of the robot arm to interact with the environment.

Examples: grippers, welding torches, spray guns, suction cups.

Drive System:

Provides power for movement (electric motors, hydraulic actuators, pneumatic actuators).

Sensors:

Internal sensors: Monitor position, speed, and acceleration.

External sensors: Detect objects, vision systems, force/torque sensors.

Controller:
The "brain" of the robot.
Contains the microprocessor and software to interpret instructions and control motion.
Power Supply:
Provides required energy (electric, hydraulic, pneumatic).

Types of Agricultural Robots

(A) Crop Production Robots

- **Seeding and Planting Robots** → Ensure precise planting with correct spacing.
- **Weeding Robots** → Identify and remove weeds without damaging crops.
- **Harvesting Robots** → Pick fruits, vegetables, and crops with robotic arms.
    - Example: *Agrobot (strawberry harvester), FFRobotics (apple picker).*

(B) Monitoring and Data Collection Robots

- Drones and ground robots for real-time monitoring of crop health, soil condition, and water needs.
- Use **AI + computer vision** to detect diseases and nutrient deficiencies.

(C) Crop-Spraying Robots

- Robots and drones for pesticide, fertilizer, and herbicide spraying with precision, reducing chemical waste.
- Example: *DJI Agras drone.*

(D) Livestock Robots

- Used for **feeding, cleaning, and health monitoring** of animals.
- Example: Robotic milking systems (e.g., *Lely Astronaut*).

(E) Autonomous Tractors & Farm Vehicles

- Driverless tractors that can plow, seed, or harvest.
- Examples: *John Deere autonomous tractor, CNH Industrial robots.*

(F) Sorting & Packaging Robots

- Robots used post-harvest for grading, sorting, and packing agricultural products.

Advantages

- ✓ Reduces human labor requirements.
- ✓ Increases crop yield and quality.
- ✓ Saves time and cost in farming operations.
- ✓ Minimizes chemical use → environmentally friendly.
- ✓ Enhances safety (robots perform tasks in hazardous conditions).
- ✓ Enables **24/7 farming operations**.

Disadvantages

- ✓ Very high initial investment cost.
- ✓ Requires skilled technicians for operation and maintenance.
- ✓ Limited adaptability to unpredictable weather/field conditions.
- ✓ Dependence on reliable power and connectivity (IoT, GPS).
- ✓ May cause unemployment for unskilled farm workers.

Applications of Agricultural Robots

- ✓ **Crop Planting & Seeding** – automated precision planting.
- ✓ **Weed Control & Pest Management** – robots that target weeds with mechanical removal or micro-spraying.
- ✓ **Harvesting & Picking** – fruit-picking robots, vegetable harvesters.
- ✓ **Soil & Crop Monitoring** – drones for plant health analysis.
- ✓ **Livestock Management** – robotic milking, feeding, and health monitoring.
- ✓ **Irrigation Management** – water distribution optimized with robotic control.
- ✓ **Post-Harvest Operations** – sorting, grading, and packaging robots.

7. Explain about the space robots in detail. Introduction

Space robots are robotic systems designed to operate in the challenging environment of outer space. They are used for **exploration, construction, maintenance, and research** in space missions where human presence is difficult, risky, or impossible.

- **Extreme temperatures** (−150°C to +120°C or more)
- **Radiation exposure**
- **Zero gravity / microgravity conditions**
- **Communication delays**

Major Components

Manipulator (Arm):
The mechanical structure with joints and links that provides movement.
Mimics the human arm with base, shoulder, elbow, and wrist joints.

End Effector (Tool):
Device attached at the end of the robot arm to interact with the environment.
Examples: grippers, welding torches, spray guns, suction cups.

Drive System:
Provides power for movement (electric motors, hydraulic actuators, pneumatic actuators).

Sensors:
Internal sensors: Monitor position, speed, and acceleration.
External sensors: Detect objects, vision systems, force/torque sensors.

Controller:
The “brain” of the robot.
Contains the microprocessor and software to interpret instructions and control motion.

Power Supply:
Provides required energy (electric, hydraulic, pneumatic).

Types of Space Robots

(A) Planetary Rovers

- Used to explore planetary surfaces (e.g., Mars, Moon).
- Equipped with cameras, drills, spectrometers.
- **Examples:**
  - *NASA's Curiosity Rover, Perseverance Rover (Mars)*
  - *China's Yutu (Moon rover)*

(B) Space Manipulators (Robotic Arms)

- Used for satellite repair, docking, and cargo handling.
- **Examples:**
  - *Canadarm & Canadarm2 (on ISS)*
  - *Dextre (ISS robotic handyman)*

(C) Autonomous Spacecraft & Landers

- Space probes exploring deep space.
- **Examples:** *Voyager probes, Rosetta mission, Chandrayaan lander.*

(D) Humanoid and Astronaut Assist Robots

- Assist astronauts in tasks aboard space stations.
- **Examples:**
  - *Robonaut 2 (NASA)*
  - *CIMON (AI assistant robot on ISS)*

(E) Drones & Hoppers

- Small flying or hopping robots for microgravity environments.
- Example: *Astrobee (NASA free-flying robot on ISS).*

(F) Construction and Maintenance Robots

- Used for building structures in space or on planetary surfaces (future lunar/Mars bases).

Advantages

- ✓ Reduces risks to astronauts in hazardous environments.
- ✓ Can operate in extreme conditions where humans cannot survive.
- ✓ Works continuously without fatigue.
- ✓ Enables exploration of distant planets, moons, and asteroids.
- ✓ Supports construction of future space habitats.

Disadvantages

- ✓ Very expensive to develop and launch.
- ✓ Limited flexibility compared to humans.
- ✓ Repair and maintenance in space are challenging.
- ✓ Communication delays cause slower operations.
- ✓ Risk of mission failure due to technical malfunctions.

Applications of Space Robots

1. **Planetary Exploration** – Mars, Moon, asteroids.
2. **Satellite Servicing** – Refueling, repair, orbit adjustments.
3. **Space Station Maintenance** – Handling experiments, moving cargo.
4. **Astronaut Assistance** – Humanoid robots reducing crew workload.
5. **Space Construction** – Building space telescopes, habitats, or solar arrays.
6. **Scientific Research** – Collecting rock/soil samples, analyzing atmosphere.
7. **Deep Space Missions** – Probes studying distant planets and interstellar space.

8. Explain about the role of Aerial robots in inspection, Assembly, Material handling, Underwater, Space and Healthcare in detail.

Introduction

Aerial robots, also known as **Unmanned Aerial Vehicles (UAVs)** or simply **drones**, are **robotic systems capable of controlled flight in the air without an onboard human pilot**.

Inspection

Aerial robots are widely used for **remote inspection** because of their mobility and ability to capture real-time data.

- **Infrastructure Inspection:** Bridges, power lines, wind turbines, pipelines, and railways.
- **Industrial Inspection:** Oil & gas facilities, nuclear power plants, solar farms.
- **Key Features:** Equipped with HD cameras, LiDAR, thermal imaging, ultrasonic and magnetic sensors.
- **Advantages:**
  - Reduces risk to human inspectors.
  - Provides access to hard-to-reach areas.
  - Cost-effective and faster compared to manual inspection.
- **Example:** DJI drones used for **power line and wind turbine inspection**.

Assembly

Aerial robots are beginning to be used in **construction and manufacturing assembly tasks**, though still at research and pilot stages.

- **Construction Industry:**
  - Aerial robots can carry lightweight building materials (e.g., bricks, cables).
  - Swarm aerial robots can assemble modular structures.
- **Manufacturing Industry:**
  - Used in aerospace to inspect and assist in component assembly.
- **Key Research Projects:**
  - ETH Zurich demonstrated drones assembling rope bridges and modular structures.
- **Advantages:**
  - Speeds up construction in hazardous or remote environments.
  - Enables autonomous and cooperative building in disaster or space missions.

Material Handling

Aerial robots can transport, deliver, or reposition materials.

- **Logistics and Warehouses:**
  - Drones used for inventory management and lightweight goods transport.
- **Delivery Systems:**
  - Amazon Prime Air, Zipline drones delivering medical supplies and e-commerce goods.
- **Construction Sites:**
  - Transporting tools, sensors, and small components.
- **Advantages:**
  - Reduces human labor.
  - Can reach remote or disaster-hit areas.
  - Faster and more efficient supply chain movement.

Underwater Applications

Though drones are typically aerial, hybrid robots are being developed to operate **both in air and underwater**.

- **Inspection of Offshore Structures:** Oil rigs, underwater pipelines, dams.
- **Environmental Monitoring:** Coral reef health, pollution tracking.
- **Search and Rescue:** Locating sunken vessels or accident debris.
- **Special Design:** Amphibious drones that can dive into water and resurface.
- **Example:**
  - *Naviator drone* (Rutgers University) can transition between air and water.
- **Advantages:**
  - Dual-environment flexibility.
  - Reduces cost compared to separate underwater ROVs.

Space Applications

Aerial robots play a critical role in **space exploration and operations** where gravity is low or absent.

- **Inside Space Stations:**
  - NASA's **Astrobee drones** fly autonomously inside the ISS to assist astronauts.
- **Planetary Exploration:**
  - NASA's **Ingenuity Mars Helicopter** (first aerial robot on another planet).
  - Used for scouting terrain, mapping, and supporting rover missions.
- **Construction in Space:**
  - Swarms of aerial robots could assemble satellites or large space structures.
- **Advantages:**
  - Operate autonomously in microgravity.
  - Reduces astronaut workload and risk.

Healthcare

Aerial robots are emerging as a vital technology in **medical and healthcare services**.

- **Medical Supply Delivery:**
  - Drones deliver blood, vaccines, and medicines to remote or disaster-struck areas.
  - Example: *Zipline drones* in Rwanda and Ghana delivering vaccines and blood.
- **Telemedicine & Emergency Response:**
  - Equipped with cameras and communication devices to connect doctors with patients remotely.
- **Disaster Relief & Pandemic Response:**
  - Drones used for spraying disinfectants, delivering test kits, and monitoring quarantined areas.
- **Hospital Logistics:**
  - Transporting lab samples, medicines, and documents across large hospital campuses.
- **Advantages:**
  - Saves critical response time in emergencies.
  - Reduces human exposure to infectious environments.
  - Provides healthcare access in rural regions.